www.AlevelApi.com

සියලු ම හිමිකම් ඇවිරිණි / முழுப் பதிப்புரிமையுடையது / All Rights Reserved]

නව නිර්දේශය/புதிய பாடத்திட்டம்/New Syllabus

NEW

ශ්‍රී ලංකා විභාග දෙපාර්තමේන්තුව / இலங்கைப் பரீட்சைத் திணைக்களம் / Department of Examinations, Sri Lanka

අධ්‍යයන පොදු සහතික පත්‍ර (උසස් පෙළ) විභාගය, 2020
கல்விப் பொதுத் தராதரப் பத்திர (உயர் தர)ப் பரீட்சை, 2020
General Certificate of Education (Adv. Level) Examination, 2020

භෞතික විද්‍යාව II
பௌதிகவியல் II
Physics II

01 E II

පැය තුනයි
மூன்று மணித்தியாலம்
Three hours

අමතර කියවීම් කාලය - මිනිත්තු 10 යි
மேலதிக வாசிப்பு நேரம் - 10 நிமிடங்கள்
Additional Reading Time - 10 minutes

Use additional reading time to go through the question paper, select the questions you will answer and decide which of them you will prioritise.

Index No. : ....

Important:

- *This question paper consists of* **16** *pages.*
- *This question paper comprises of* ***two*** *parts, Part* **A** *and Part* **B.** *The time allotted for* ***both parts*** *is* ***three hours.***
- *Use of calculators is* ***not*** *allowed.*

PART A — Structured Essay:
(pages 2 - 8)

Answer ***all*** *the questions on this paper itself. Write your answers in the space provided for each question. Note that the space provided is sufficient for your answers and that extensive answers are not expected.*

PART B — Essay:
(pages 9 - 16)

This part contains ***six*** *questions, of which,* ***four*** *are to be answered. Use the papers supplied for this purpose.*

- *At the end of the time allotted for this paper, tie the* ***two parts together*** *so that* ***Part* A** *is* ***on top*** *of* ***Part* B** *before handing them over to the Supervisor.*
- *You are permitted to remove* ***only Part* B** *of the question paper from the Examination Hall.*

For Examiners' Use Only

For the second paper		
Part	**Question Nos.**	**Marks Awarded**
A	1	
	2	
	3	
	4	
B	5	
	6	
	7	
	8	
	9 (A)	
	9 (B)	
	10 (A)	
	10 (B)	
Total	In numbers	
	In words	

Code Numbers

Marking Examiner 1	
Marking Examiner 2	
Marks checked by	
Supervised by	

[see page two

උසස් පෙළ විද්‍යා/ගණිත/කලා/වාණිජ හා තාක්ෂණ විෂය ධාරාවන්ට අදාල සියලුම ප්‍රශ්න පත්‍ර/සටහන් හා තවත් බොහෝ දෑ ලබා ගැනීමට පිවිසෙන්න www.alevelapi.com වෙත .

Do not write in this column

PART A – Structured Essay

*Answer **all four** questions on this **paper itself**.*

($g = 10\,\text{m s}^{-2}$)

1. You are asked to determine the spring constant (k) of a helical spring by plotting a graph of extension against load. In the experimental setup shown in the figure, one end of the spring is attached to a scale pan and the other end is firmly connected to a stand. Assume that the masses of the scale pan and the spring are negligible.

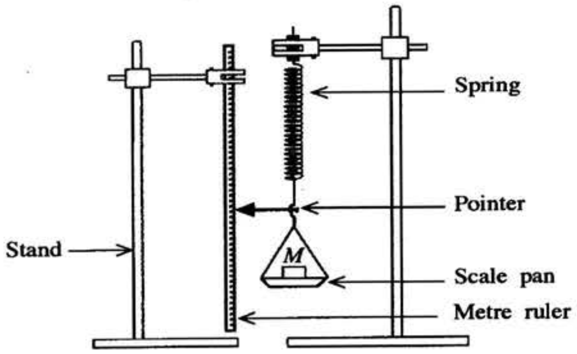

(*a*) When a force F is applied to the spring, the length of the spring is increased by an amount x. Write down an expression for F in terms of k and x.

....

(*b*) (i) The table below gives the values of mass (M) placed on the pan and the corresponding readings of the pointer. Complete the extension column in the table.

Mass on the scale pan, M (gram)	Reading of the pointer (cm)	Extension x of the spring (cm)
0	1·0	0
50	2·0	
100	3·0	
150	4·0	
200	5·2	
250	6·0	
300	6·8	

(ii) Plot a graph of extension x (cm) against mass on the scale pan M (gram) on the following grid.

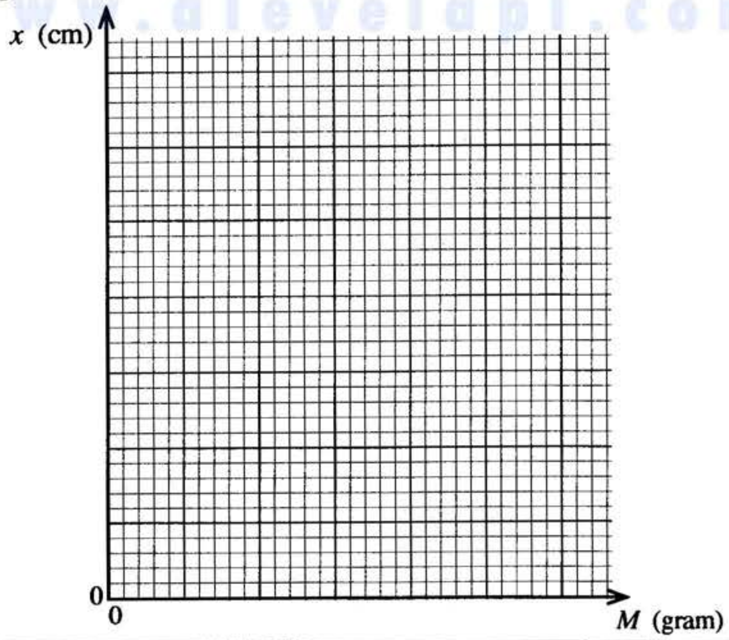

[see page three

උසස් පෙළ විද්‍යා/ගණිත/කලා/වාණිජ හා තාක්ෂණ විෂය ධාරාවන්ට අදාල සියලුම ප්‍රශ්න පත්‍ර/සටහන් හා තවත් බොහෝ දෑ ලබා ගැනීමට පිවිසෙන්න www.alevelapi.com වෙත .

Do not write in this column

(iii) Using the graph drawn above determine the value of k in SI units.

....

....

....

....

(*c*) Write down **two** essential experimental steps that you have to follow when taking readings.

(1) ....

....

(2) ....

....

(*d*) To maintain the percentage error of k within 5% what should be the maximum error (Δk) of the value of k?

....

....

(*e*) Another spring of negligible mass is connected in series with the above spring and the experiment is repeated with the same masses. Draw the expected graph in this situation on the same grid in (*b*) (ii) above, and label it as Q.

2. You are asked to determine the atmospheric pressure using a dry air column trapped in a quill tube of length L. The figure shown is incomplete and not drawn to scale.

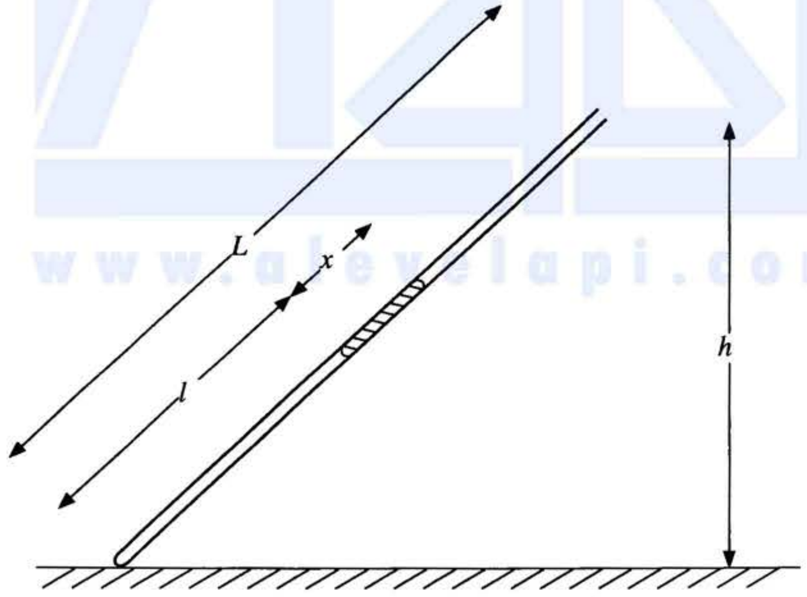

(*a*) Complete the experimental set up by drawing appropriate items and name them.

(*b*) What are the approximate values of length and internal diameter of the quill tube used in this experiment?

Length : ....cm

Internal diameter : ....mm

[see page four

උසස් පෙළ විද්‍යා/ගණිත/කලා/වාණිජ හා තාක්ෂණ විෂය ධාරාවන්ට අදාල සියලුම ප්‍රශ්න පත්‍ර/සටහන් හා තවත් බොහෝ දෑ ලබා ගැනීමට පිවිසෙන්න www.alevelapi.com වෙත .

Do not write in this column

(*c*) What should be the approximate length of the mercury column used in this experiment? Underline the correct answer.

(1) 2 cm (2) 10 cm (3) 30 cm

(*d*) The internal cross-sectional area of the tube is A and the atmospheric pressure is H (in cm Hg). Here l, x values are in cm and A is in cm^2.

(i) Write down an expression for the pressure (in cm Hg) of the trapped air column in terms of H, h, x and L.

....

....

(ii) Applying the Boyle's law to the trapped air column, write down an expression to determine H in terms of h, x, L, l, A and a constant (k).

....

....

(iii) Rearrange the expression obtained in (*d*) (ii) above to determine H by plotting a straight line graph.

....

....

....

(iv) In the graph mentioned in (*d*) (iii) above identify the independent and dependent variables.

Independent variable : ....

Dependent variable : ....

(v) Label the axes and draw a rough sketch of the graph expected by you. Label the line drawn as P.

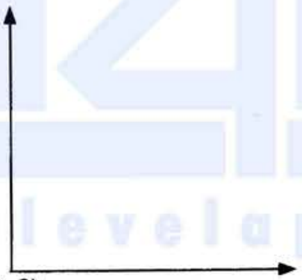

(0, 0)

www.alevelapi.com

(vi) Write down an expression for the atmospheric pressure H using the informations extracted from the graph and relevant parameters.

....

....

(*e*) What is the best experimental procedure to vary h values? Underline the correct answer.

(i) From a lower value to a higher value / from a higher value to a lower value.

(ii) Give the reason. ....

....

(*f*) If the air trapped in the tube is not dry and contained saturated water vapour throughout the experiment, sketch the expected line on the above graph and label it as Q.

[*see page five*

උසස් පෙළ විද්‍යා/ගණිත/කලා/වාණිජ හා තාක්ෂණ විෂය ධාරාවන්ට අදාල සියලුම ප්‍රශ්න පත්‍ර/සටහන් හා තවත් බොහෝ දෑ ලබා ගැනීමට පිවිසෙන්න www.alevelapi.com වෙත .

Do not write in this column

3. In order to determine the speed (v) of transverse waves in a stretched wire using resonance, you are provided a sonometer setup as shown in figure (1). You are also provided with a set of tuning forks.

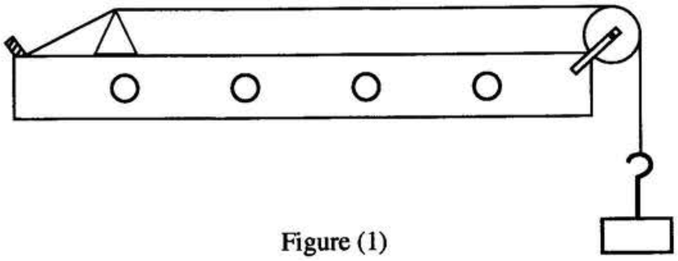

Figure (1)

(*a*) In this experiment the fundamental mode of resonance of the wire is used. What is the reason for this?

....

....

(*b*) Draw the wave pattern formed between bridges P and Q on the following figure (2) for fundamental mode of vibration of the wire. Indicate on same diagram by drawing an arrow, the best position, where the paper rider has to be placed and mark it as X.

Figure (2)

(*c*) (i) The distance between the bridges in part (b) above is l and the frequency of the tuning fork is f. Write down an expression for the speed (v) of transverse wave in the sonometer wire in terms of l and f.

....

(ii) Rearrange the expression in part (*c*) (i) above to determine the wave speed v by drawing a straight line graph using the set of tuning forks with known frequencies, so that dimension of the gradient to be LT^{-1}.

....

....

(iii) State the independent and dependent variables of the graph mentioned in (*c*) (ii) above.

Independent variable : ....

Dependent variable : ....

(iv) Coordinates of two points selected to determine the gradient of the above graph are (0·002, 22) and (0·004, 42), Here l is measured in cm and f is in Hz. Find the value of wave speed v in $m\,s^{-1}$.

....

....

....

....

....

[*see page six*

උසස් පෙළ විද්‍යා/ගණිත/කලා/වාණිජ හා තාක්ෂණ විෂය ධාරාවන්ට අදාල සියලුම ප්‍රශ්න පත්‍ර/සටහන් හා තවත් බොහෝ දෑ ලබා ගැනීමට පිවිසෙන්න www.alevelapi.com වෙත .

Do not write in this column

(*d*) Considering the length of the prongs of tuning forks, which tuning fork is the best for taking the first measurement? Give reason for your answer.

Tuning fork to be used : ....

Reason : ....

....

(*e*) Vibrating directions of two prongs of tuning fork at a given moment is indicated by arrow heads in figure (3). Indicate the vibration direction of particles of stem (*S*) of the tuning fork at the same moment by drawing an arrow head appropriately on the same figure.

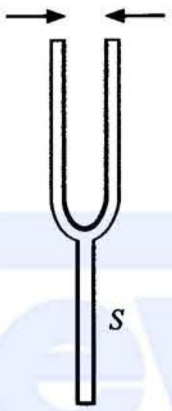

Figure (3)

(*f*) Masses 1 kg, 2 kg and 3 kg can be used to stretch the sonometer wire. What is the most suitable mass to be used in the experiment? Give reason for your selection.

Most suitable mass : ....

Reason : ....

....

(*g*) If the wire is resonating with frequency *f*, write down an expression for the amplitude (*A*) of the wire in terms of *f* and *g* when the paper rider just jumps off.

....

....

(*h*) Write down a possible error that could happen when determining the resonance length *l* and action that you would take to minimize it.

Error : ....

Action : ....

....

....

[see page seven

උසස් පෙළ විද්‍යා/ගණිත/කලා/වාණිජ හා තාක්ෂණ විෂය ධාරාවන්ට අදාල සියලුම ප්‍රශ්න පත්‍ර/සටහන් හා තවත් බොහෝ දෑ ලබා ගැනීමට පිවිසෙන්න www.alevelapi.com වෙත .

www.AlevelApi.com

Do not write in this column

4. A student plans to perform an experiment to determine the electromotive force (e.m.f.) E and the internal resistance r of a given cell using a graphical method. An incomplete circuit diagram that can be used for the experiment is given beow. The student is provided with following items.

Milliammeter

Digital voltmeter

Standard resistor 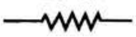

Keys and 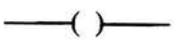

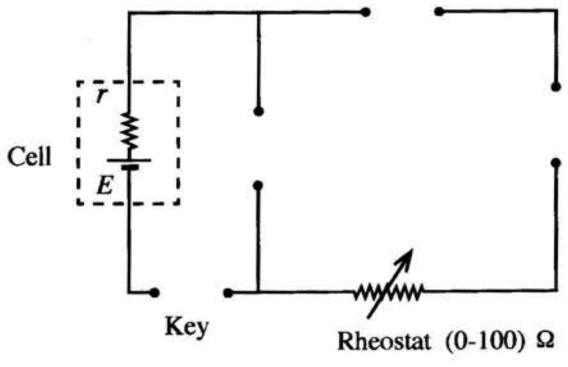

(*a*) Complete the circuit diagram correctly by drawing the appropriate symbols of the items given above.

(*b*) (i) Name the type of the key that the student must use: ....

(ii) Give the reason for selecting the key.

....

....

(*c*) Write down an expression for the voltmeter reading V, using the milliammeter reading I, the e.m.f. E and the internal resistance r.

....

(*d*) To plot a straight line graph, the student must select appropriate six values for the independent variable. How does the student identify the approximate range of the independent variable in order to select its suitable values?

....

....

....

(*e*) Write down the procedure that the student must follow to take readings.

....

....

....

[see page eight

උසස් පෙළ විද්‍යා/ගණිත/කලා/වාණිජ හා තාක්ෂණ විෂය ධාරාවන්ට අදාල සියලුම ප්‍රශ්න පත්‍ර/සටහන් හා තවත් බොහෝ දෑ ලබා ගැනීමට පිවිසෙන්න www.alevelapi.com වෙත .

Do not write in this column

(*f*) In this experiment, the graph plotted by the student is given below.

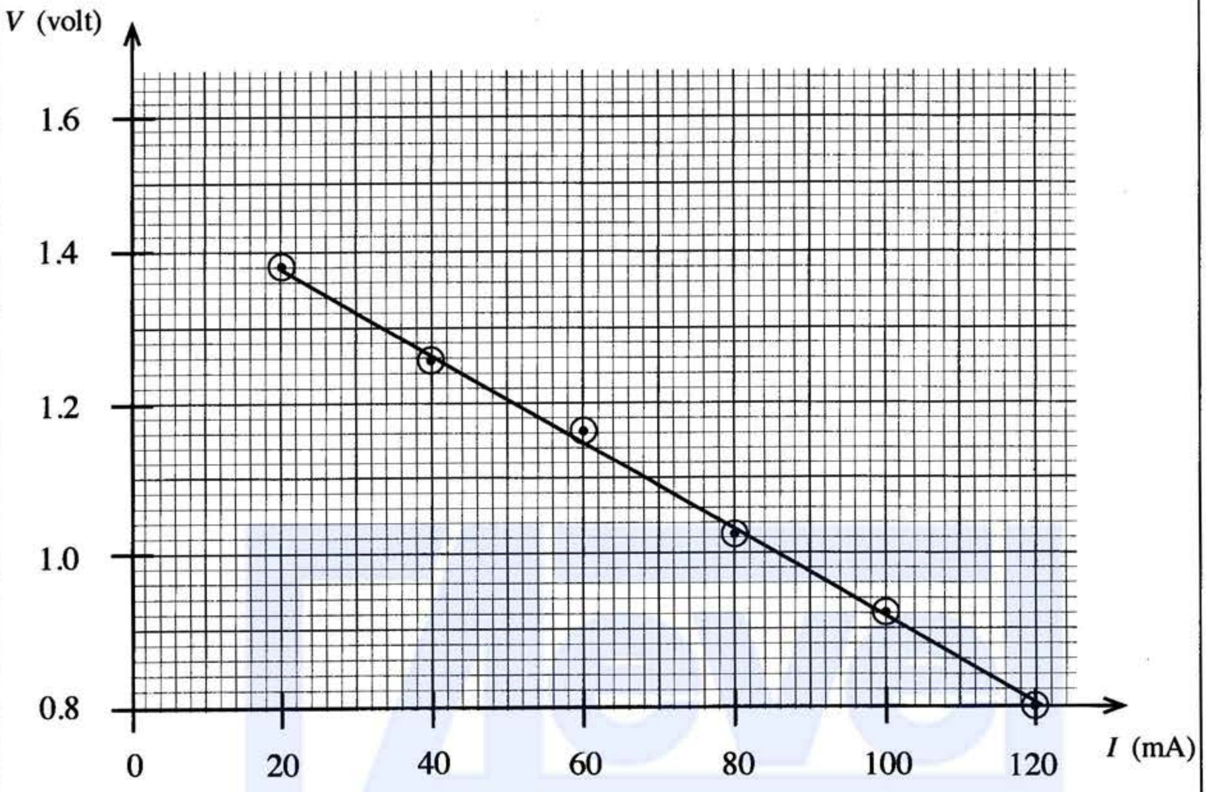

(i) Calculate the gradient of the graph using two suitable points.

....

....

....

(ii) Determine the internal resistance r of the cell.

....

(iii) Determine the e.m.f. E of the cell.

....

....

(*g*) (i) What is the short-circuit current (in ampere) that can be obtained from the given cell? Give your answer to two decimal places.

....

....

(ii) What is the maximum power that can be obtained from the cell by connecting an appropriate resistance?

....

....

(*h*) If the same experiment is done for a nickel-cadmium (Ni-Cd) cell having a lower e.m.f. and a lower internal resistance, sketch the expected line in the same grid given in (*f*) above.

* *

[see page nine

උසස් පෙළ විද්‍යා/ගණිත/කලා/වාණිජ හා තාක්ෂණ විෂය ධාරාවන්ට අදාල සියලුම ප්‍රශ්න පත්‍ර/සටහන් හා තවත් බොහෝ දෑ ලබා ගැනීමට පිවිසෙන්න www.alevelapi.com වෙත .

සියලු ම හිමිකම් ඇවිරිණි / முழுப் பதிப்புரிமையுடையது / All Rights Reserved]

නව නිර්දේශය/புதிய பாடத்திட்டம்/New Syllabus

NEW
ශ්‍රී ලංකා විභාග දෙපාර්තමේන්තුව
இலங்கைப் பரீட்சைத் திணைக்களம்
Department of Examinations, Sri Lanka

අධ්‍යයන පොදු සහතික පත්‍ර (උසස් පෙළ) විභාගය, 2020
கல்விப் பொதுத் தராதரப் பத்திர (உயர் தர)ப் பரீட்சை, 2020
General Certificate of Education (Adv. Level) Examination, 2020

භෞතික විද්‍යාව II
பௌதிகவியல் II
Physics II

PART B — Essay

01 E II

*Answer **four** questions only.*
($g = 10\,\mathrm{m\,s^{-2}}$)

5. (*a*) A uniform block of mass M is initially at rest on a horizontal rough plane. Then a horizontal force (P) which is gradually increased from zero is applied to the block. Let the frictional force be F.

(i) Draw a free-body diagram of the block for the above situation and name all the forces.

(ii) Sketch the graph of F against P from the initial position until the block moves with acceleration. Mark the limiting frictional force (F_L) and the dynamic frictional force (F_D) on the graph.

(iii) Write down expressions for the coefficient of limiting friction, μ_L and the coefficient of dynamic friction, μ_D.

(*b*) In front-wheel drive cars, the engine is coupled to the front wheels through axles to drive the car. Consider a front-wheel drive car moving on a horizontal straight rough tar road as shown in the figure. The coefficients of friction between the tyres and the tar road are $\mu_L = 0{\cdot}8$ and $\mu_D = 0{\cdot}5$ respectively. Consider only the limiting or dynamic frictional forces acting on the car when solving problems below unless otherwise stated.

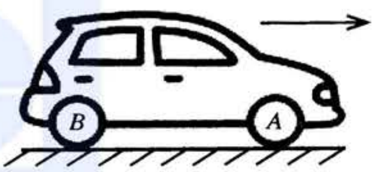

(i) The situation when the car accelerates on a horizontal straight rough road is shown in the diagram. Copy wheels A and B of the diagram into your answer sheet and mark the frictional force on a front-wheel (A) as F_A and on a rear-wheel (B) as F_B. Also compare the magnitudes of F_A and F_B when accelerating.

(ii) The mass of the car including the driver is 1200 kg which is equally distributed over all the four wheels. Identifying the correct coefficient of friction acting in this situation, calculate the maximum initial driving force of the car on the horizontal straight tar road.

(iii) When the car is moving at uniform velocity of $72\,\mathrm{km\,h^{-1}}$ on the horizontal straight road, the total resistance against the motion is 520 N. Find the power of the car at that velocity.

(iv) Next the car climbs a steep road with angle of inclination 12° to the horizontal at same power as in (*b*)(iii) above. If the total resistance against motion is now 200 N, find the maximum velocity of climbing. Use $\sin(12°) = 0{\cdot}2$.

(v) (I) While the car was again moving at uniform velocity of $72\,\mathrm{km\,h^{-1}}$ on the horizontal straight road, the driver suddenly saw an obstacle on the road at a distance 35 m. When he quickly applied brakes, all four wheels were locked and the tyres started to slip without rolling. Identifying the correct coefficient of friction acting in this situation and by giving appropriate reasoning and calculation, state whether the car would hit the obstacle or not. Neglect the reaction time of the driver before braking.

(II) If tyres are slipping when brakes are applied, then the car will move a longer distance in a straight line without control which can cause accidents. To avoid such slipping of tyres without rolling, cars are equipped with an anti-lock braking system (ABS). When tyres start to slip during braking, ABS automatically releases the brakes and allows tyres to roll again. This process happens several times a second and the effective coefficient of friction brings close to the value that of limiting friction. When the car is fitted with an ABS, the effective coefficient of friction becomes 0·75. Calculate the new stopping distance of the ABS fitted car for the same situation mentioned in (*b*) (v) (I) above.

(vi) Then the car enters a horizontal circular road of radius of curvature 18 m. Assuming that the coefficients of friction are same as in part (*b*) above, find the maximum velocity that the car can move safely without slipping.

[*see page ten*

උසස් පෙළ විද්‍යා/ගණිත/කලා/වාණිජ හා තාක්ෂණ විෂය ධාරාවන්ට අදාල සියලුම ප්‍රශ්න පත්‍ර/සටහන් හා තවත් බොහෝ දෑ ලබා ගැනීමට පිවිසෙන්න www.alevelapi.com වෙත.

6. Read the following passage and answer the questions.

Figure (1) shows a cross-section of a human eye. The combination of the corneal and the eye lenses focuses light on to the retina. But light refracts far more when passing from air into the cornea, since the difference in refractive indices between air ($n_a = 1$) and cornea ($n_c = 1{\cdot}38$) is large.

The corneal lens and the eye lens can be considered as convex lenses of fixed focal length and of variable focal length respectively. The focal length of the eye lens could be changed by the action of ciliary muscles. This combination could be treated as a two thin convex lenses in contact.

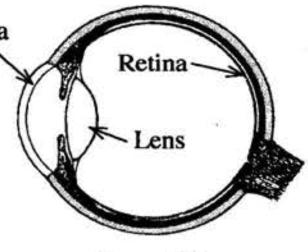

Figure (1)

Two common defects of vision are near-sightedness and far–sightedness. Usually these defects can be corrected by the use of suitable lenses. Nowadays these defects also could be corrected using a computer-controlled ultra-violet (UV) laser rays by removing microscopic amounts of tissue from the cornea and thereby reshaping the cornea. This procedure is known as a LASIK surgery. The aim is to restore normal eyesight, without the need for eye-glasses or contact lenses.

These type of lasers, unlike continuous lasers in bar-code readers, are pulsed. They emit energy as short pulses of about 10 fs duration (1 fs = 10^{-15} s). These lasers are ideal for eye surgery, because highly intense pulses of UV light is absorbed only by a very thin layer of tissue of the cornea. The incident UV light decomposes the thin layer into a vapour of small molecules, which fly away from the corneal surface rapidly leaving behind very little energy which won't cause any damage to the adjacent tissues.

These type of pulsed lasers are also commonly used in the production of microelectronic devices, and semiconductor integrated circuits (IC). [Hint: Power of a converging lens is positive and given by dioptres (D)].

(*a*) Refraction of light entering the eye mostly happens at the air-cornea interface. What is the reason for this?

(*b*) (i) If the angle of incidence of a monochromatic light ray entering the cornea is i, and the angle of refraction is r, write down an expression for the refractive index of the cornea n_c, in terms of i and r.

(ii) When, $i = 30^\circ$, r becomes $21^\circ 14'$. What is the angle of deviation of the ray in this situation?

(*c*) (i) Distance from the compound lens to the retina and to the near point of the eye is 2·5 cm and 25·0 cm respectively. By drawing corresponding ray diagrams, calculate the **minimum** and **maximum** powers of the compound lens.

(ii) If the power of the lens formed by the cornea is +30 D, calculate the corresponding powers of the eye lens in the two situations mentioned in (*c*) (i) above.

(*d*) (i) The near point of a defective eye of a person is 50 cm. What is the power of the compound lens of this defective eye when the person reads a newspaper located at a distance 50 cm from his eye?

(ii) If the power of the lens formed by the cornea is +30 D, what is the corresponding power of the eye lens in this situation?

(iii) Without wearing an eye-glass if the person decides to correct his vision by a LASIK surgery, what should be the power of the reshaped corneal lens?

(iv) If the person decides to wear an eye-glass without doing a laser surgery what is the type and the power of the eye-glass that the person should wear?

(*e*) What is the advantage of using pulsed UV lasers instead of continuous lasers in eye surgery?

(*f*) During a laser surgery, a short pulse of ultraviolet light is projected onto the cornea of a person. It makes a spot of 0·5 mm in radius on the cornea and delivers 0·55 mJ of energy on to the spot in the corneal tissue. Calculate the thickness of the tissue removed from the corneal surface. The corneal tissue is initially at 30 °C. Assume that the removed tissue temperature is increased to 100 °C and then vapourises without further temperature increase. [Density of the corneal tissue = 10^3 kg m^{-3}; specific heat capacity of corneal tissue = $4{\cdot}0 \times 10^3$ J kg^{-1} K^{-1} ; specific latent heat of vapourization of corneal tissue = $2{\cdot}52 \times 10^6$ J kg^{-1} ; Take $\pi = \frac{22}{7}$]

(*g*) Figure (2) shows a train of pulses created by a pulsed UV laser. The energy contained in a single pulse is 20 mJ.

(i) If the width of a single pulse is 10 fs, determine the peak power (power in a single pulse) of the laser beam.

(ii) If the pulse repetition rate is 500 Hz, determine the mean power of the laser beam.

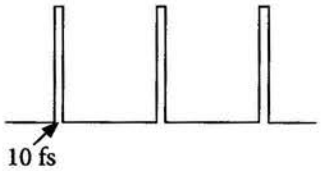

Figure (2)

(*h*) State another use of UV pulsed lasers.

[see page eleven

උසස් පෙළ විද්‍යා/ගණිත/කලා/වාණිජ හා තාක්ෂණ විෂය ධාරාවන්ට අදාළ සියලුම ප්‍රශ්න පත්‍ර/සටහන් හා තවත් බොහෝ දෑ ලබා ගැනීමට පිවිසෙන්න www.alevelapi.com වෙත .

7. (*a*) (i) Stress-strain curve for a metal wire is shown in figure (1). Identify the characteristic points A, B, C and D.

(ii) If the wire is stretched up to the value depicted by point C and released, what will happen to the wire?

(iii) What is represented by the area under the stress-strain curve?

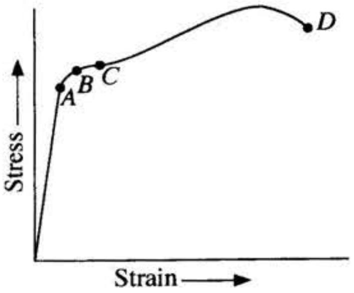

Figure (1)

(*b*) Iron beams are used to support heavy loads in the construction of structures and buildings. When a uniformly distributed load is applied on a beam with a rectangular cross section supported at its two ends, the upper part of the beam is compressed and becomes shorter. Similarly the lower part of the beam is elongated and becomes longer. The length of the middle layer of the beam does not change and it is known as the neutral axis.

The distribution of forces acting on the upper part of the beam of thickness d is illustrated in figure (2). The figure is not drawn to scale. Copy this diagram on to your answer sheet and draw the distribution of forces acting on the lower part of the beam.

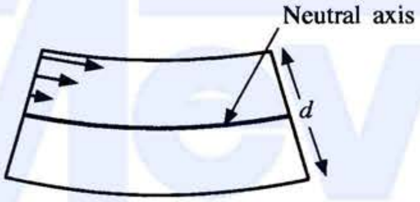

Figure (2)

(*c*) The lower section of the beam in figure (2) is shown in figure (3). The radius of curvature of the neutral axis is r which subtends an angle α (in radians) at the center O. The length of the neutral axis of the beam is l.

(i) Write down an expression for l in terms of r and α.

(ii) Write down an expression for l' in terms of r, d and α. Here l' is the length of the bottom layer (B) of the lower section of the beam.

(iii) Show that the average value of the strain existing on the lower section of the beam is given by $\frac{d}{4r}$.

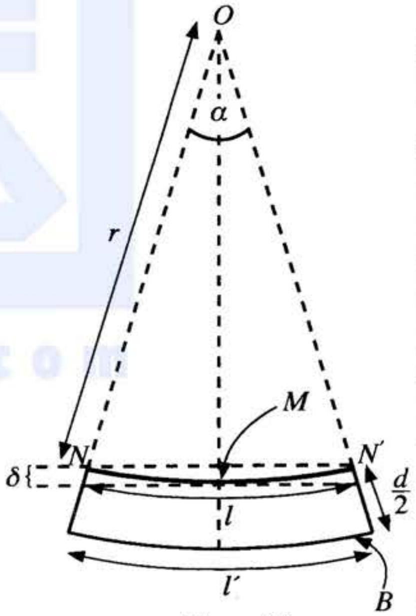

Figure (3)

(*d*) (i) What is the force acting along the neutral axis (NN')?

(ii) If the average value of the tensile force acting on the lower section of the beam is F, what will be the force acting along the bottom layer (B) of the lower section of the beam?

(iii) If the width of the beam is w and the Young's modulus of iron is Y, show that force F is given by $F=\frac{wd^2Y}{8r}$.

(iv) When the lower section of the beam is subjected to a average tensile stress of $1{\cdot}0\times10^{8}\,\mathrm{N\,m^{-2}}$, determine the value of radius r. Young's modulus of iron, $Y = 2{\cdot}0\times10^{11}\,\mathrm{N\,m^{-2}}$; $d = 20\,\mathrm{cm}$.

(v) If $l = 5{\cdot}0\,\mathrm{m}$, determine α in radians.

(vi) Using $\cos(\frac{\alpha}{2}) = 0{\cdot}9997$, calculate the depression δ of the midpoint (M) of the neutral axis of the beam.

(*e*) Figure (4) shows a rectangular beam and an I (or H)–shaped beam made out of iron. In the construction field, I-shaped beams are generally used instead of rectangular beams. Giving reasons state the advantage of this.

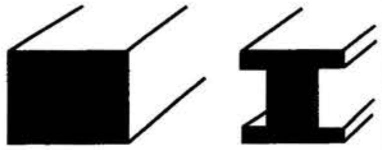
Figure (4)

[see page twelve

උසස් පෙළ විද්‍යා/ගණිත/කලා/වාණිජ හා තාක්ෂණ විෂය ධාරාවන්ට අදාල සියලුම ප්‍රශ්න පත්‍ර/සටහන් හා තවත් බොහෝ දෑ ලබා ගැනීමට පිවිසෙන්න www.alevelapi.com වෙත .

8. A defibrillator is a medical instrument that is used to restore the rhythmic pattern of heart after a cardiac arrest of a patient. It gives a high energy electric shock in a short burst to the heart through a set of electrodes across the patient's chest by discharging charge stored in a capacitor.

(*a*) A defibrillator delivers 48 J of energy to a heart patient by discharging a capacitor initially charged to a potential difference of 400 V.

(i) Derive an expression for the energy stored W in a capacitor in terms of capacitance C and the potential difference V across the capacitor.

(ii) What is the capacitance of the capacitor in the device?

(iii) Calculate the amount of charge stored in the capacitor.

(iv) Assuming that the total charge calculated in part (iii) was sufficient to pass a constant current through the body with 12 ms time period, calculate this constant current.

(v) What is the effective resistance of the path of the current calculated in (*a*) (iv) above?

(*b*) (i) A parallel plate capacitor is filled with a medium of dielectric constant k. Derive an expression for electric field intensity E in the medium in terms of charge stored in the capacitor Q, plate area A, permittivity of free space ε_0 and k, by using Gauss's law.

(ii) If the charged capacitor mentioned in (a) above is a parallel plate capacitor with plate area of 80 cm^2 filled with a medium of dielectric constant $k = 5000$, what is the value of the electric field intensity in the medium. $\varepsilon_0 = 9{\cdot}0 \times 10^{-12}$ F m^{-1}.

(iii) Determine the separation d between the plates of this capacitor.

(*c*) (i) In order to apply an electric shock with the appropriate energy based on the patient, five capacitors of equal capacitance mentioned in (*a*) above and equal potential difference of 400 V across each capacitor have been connected in series instead of one capacitor. Calculate maximum energy that can be supplied to a patient after connecting five capacitors in series?

(ii) What would be the maximum energy that can be supplied to a patient if five capacitors of equal capacitance mentioned in above part (*a*) are connected in parallel with a potential difference of 400 V?

(iii) Out of series and parallel connections of capacitors mentioned in (*c*) (i) and (*c*) (ii) above the series connection is recommended for the defibrillator. Giving reasons briefly explain this.

(*d*) (i) What factors determine the process of point or corona discharge?

(ii) If the breakdown electric field intensity of the medium mentioned in (*b*) (ii) above is $8{\cdot}0 \times 10^8$ V m^{-1}, will this capacitor get damaged? Give reasons.

(*e*) Suppose the capacitor in (*b*) above is initially charged to Q_0 using a potential difference of V_0. If the charge and the potential difference of the capacitor after 12 ms are equal to $0{\cdot}37Q_0$ and $0{\cdot}37V_0$ respectively, what percentage of energy stored in the capacitor has been released to the patient during this period. [Take $(0{\cdot}37)^2 = 0{\cdot}14$]

[see page thirteen

Aevel Api උසස් පෙළ විද්‍යා/ගණිත/කලා/වාණිජ හා තාක්ෂණ විෂය ධාරාවන්ට අදාළ සියලුම ප්‍රශ්න පත්‍ර/සටහන් හා තවත් බොහෝ දෑ ලබා ගැනීමට පිවිසෙන්න www.alevelapi.com වෙත .

9. Answer either part (A) or part (B) only.

Part (A)

(*a*) (i) Write down an expression for the energy dissipation in a resistor of resistance R, when a direct current (d.c.) I flows through it in time t.

(ii) The variation of sinusoidal alternating voltage V with time t is shown in figure (1). Write down an expression for root mean square voltage V_{rms} in terms of peak voltage V_p.

(iii) Out of the four lines A, B, C, D drawn in figure (1) which lines represent V_p and V_{rms} respectively?

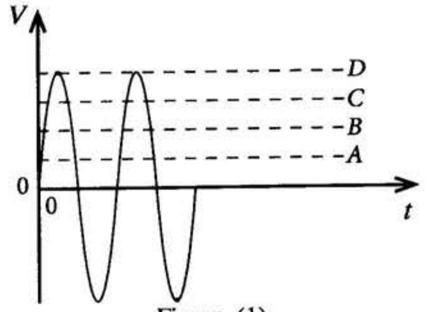

Figure (1)

(iv) State the main advantage of using high tension a.c. voltage in long distance power transmission.

(v) Rewrite the expression obtained for energy dissipation in (*a*) (i) above for a.c. currents.

(*b*) A part of an electrical circuit connected to the a.c. main supply is shown in figure (2).

Following electrical appliances are connected to the main 230 V supply using a copper wire AB of cross sectional area 1 mm^2 and length 10 m. Assume that the voltage drop across AB is negligible.

L_1 – Rice cooker of 1200 W,

L_2 – Refrigerator of 300 W,

L_3 – Electric kettle of 800 W

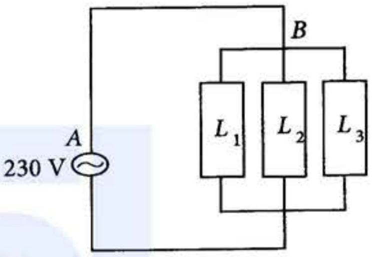

Figure (2)

(i) Calculate the maximum current flow in the wire.

(ii) Calculate the temperature rise when the maximum current flows through the wire for 10 s. Assume that the wire is completely insulated and no loss of heat to the outside. Mass of the wire is 100 g. Resistivity and the specific heat capacity of copper are $1{\cdot}8 \times 10^{-8}\ \Omega$ m and 360 J kg^{-1} °C^{-1} respectively.

(iii) Instead of a single copper wire a composite wire made of few such wires connected in parallel is used in high current flowing applications. Explain how this arrangement reduces heat dissipation.

(*c*) An electricity meter measures the amount of electrical energy consumption in kW h. It uses eddy currents to rotate a thin circular aluminium disc. The number of revolutions of the aluminium disc is directly proportional to the electrical energy consumption.

(i) A solenoid is placed over the horizontal aluminium disc, perpendicular to its plane as illustrated in figure (3). Suppose that the current through the solenoid is increasing in the direction as indicated in the figure. Copy the figure (3) in to your answer sheet and draw the magnetic flux lines due to current in the solenoid and eddy current loops on the disc, indicating their directions.

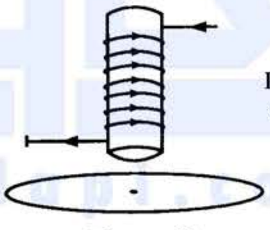

Figure (3)

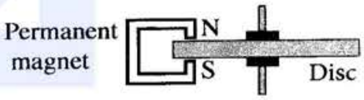

Figure (4)

(ii) To decelerate the free revolutions of the disc when the power consumption is stopped, a permanent magnet is fixed as shown in the figure (4). Explain how the deceleration of the disc happen.

(*d*) During the period from 6.00 p.m. to 10.00 p.m. for a particular day at a house, the number of revolutions per minute (r.p.m) of the disc is measured. The graph in figure (5) shows its variation. The electricity meter is calibrated in such a way that 500 rotations is equivalent to 1 kW h.

(i) Calculate the electrical power consumption at 8.30 p.m.

(ii) If the electricity unit price between 7.00 p.m. to 9.00 p.m. is Rs. 40.00 per kW h and rest of the time is Rs. 10.00 per kW h, calculate the total cost for the period from 6.00 p.m. to 10.00 p.m.

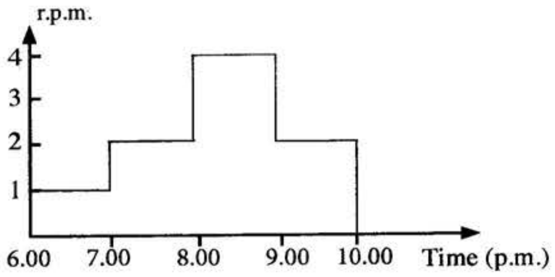

Figure (5)

[see page fourteen

උසස් පෙළ විද්‍යා/ගණිත/කලා/වාණිජ හා තාක්ෂණ විෂය ධාරාවන්ට අදාල සියලුම ප්‍රශ්න පත්‍ර/සටහන් හා තවත් බෝහෝ දෑ ලබා ගැනීමට පිවිසෙන්න www.alevelapi.com වෙත .

Part (B)

(*a*) Write down the 'golden rules' applicable to an ideal operational amplifier (op-amp) when it operates in negative feedback mode.

(*b*) The op-amp circuit shown in figure (1) is known as a 'Differential amplifier' since it amplifies the difference between the two input voltages V_2 and V_1. The voltages at the non-inverting input and inverting input of the op-amp circuit are V_+ and V_- respectively and V_0 is the output voltage of the op-amp.

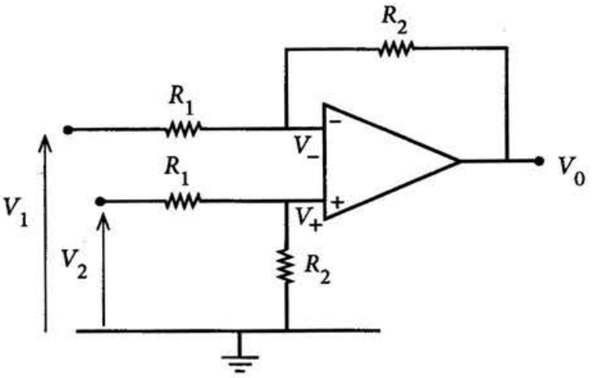

Figure (1)

(i) Write down an expression for V_+ in terms of V_2, R_1 and R_2.

(ii) Write down an expression for V_- in terms of V_2, R_1 and R_2.

(iii) Derive an expression for V_0 in terms of V_1, V_2, R_1 and R_2.

(iv) Deduce an expression for V_0, if $R_1 = R_2 = R$.

(*c*) The above circuit in figure (1) can be modified to activate a burglar alarm. The modified circuit is shown in figure (2). The right arm of the bridge circuit has two equal resistors of resistance R_1 and the left arm consists of a 50 Ω resistor and a light dependent resistor (LDR) which is sensitive to infra- red (IR) light. A narrow beam of IR light is allowed to fall on to the LDR continuously. When a burglar (*B*) enters the building he blocks the IR beam falling on to the LDR.

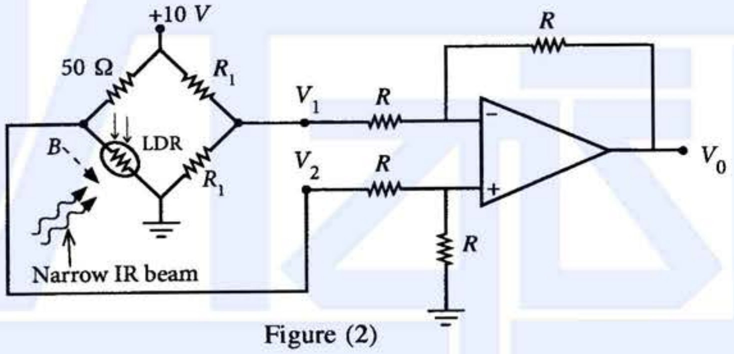

Figure (2)

(i) When the IR beam falls on to the LDR its resistance is equal to 50 Ω. Determine the corresponding values of V_1, V_2 and V_0.

(ii) When the burglar crosses the IR beam the resistance of the LDR increases to 10^6 Ω. Determine the corresponding values of V_1, V_2 and V_0 in this situation.

(*d*) (i) Now the output V_0 of the op-amp is connected to the *S* input of an *S-R* flip-flop as shown in figure (3). The *R* input is grounded via a two - way switch. The alarm should sound when $Q = 1$. Write down the input logic levels of *S* and *R* for the following two situations.

(1) When the IR beam is incident on the LDR.

(2) When the burglar crosses the IR beam.

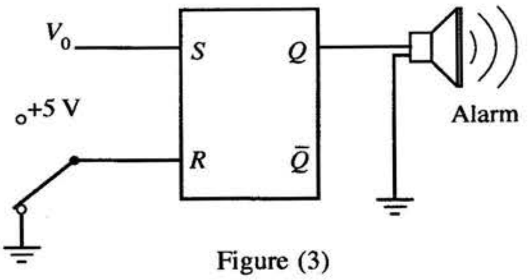

Figure (3)

(ii) Write down the truth table of an *S-R* flip-flop.

(iii) Show that the alarm will sound when the burglar crosses the IR beam.

(iv) Explain why is it desirable to use a flip-flop in this situation?

(v) Later the alarm has to be stopped. How could this be achieved? Give reasons for your answer.

[see page fifteen

උසස් පෙළ විද්‍යා/ගණිත/කලා/වාණිජ හා තාක්ෂණ විෂය ධාරාවන්ට අදාළ සියලුම ප්‍රශ්න පත්‍ර/සටහන් හා තවත් බොහෝ දෑ ලබා ගැනීමට පිවිසෙන්න www.alevelapi.com වෙත .

10. Answer either part (A) or part (B) only.

Part (A)

Geothermal energy is heat energy trapped in hot regions known as hotspots in the Earth. When underground water comes in contact with hotspots, it produces superheated water and traps between the rocks at high pressure as hot water reservoirs.

(*a*) An underground hot water reservoir of volume $1{\cdot}0 \times 10^8\ \text{m}^3$ and temperature 200 °C exists at high pressure in a hotspot region. Earth is drilled up to the hot water reservoir and steam is fed to a turbine through a vertical cylindrical pipe as shown in the figure (1) (drawn not to scale). Assume that the mean specific heat capacity and mean density of superheated water between 200 °C and 100 °C are $4{\cdot}5 \times 10^3\ \text{J kg}^{-1}\ \text{K}^{-1}$ and $900\ \text{kg m}^{-3}$ respectively.

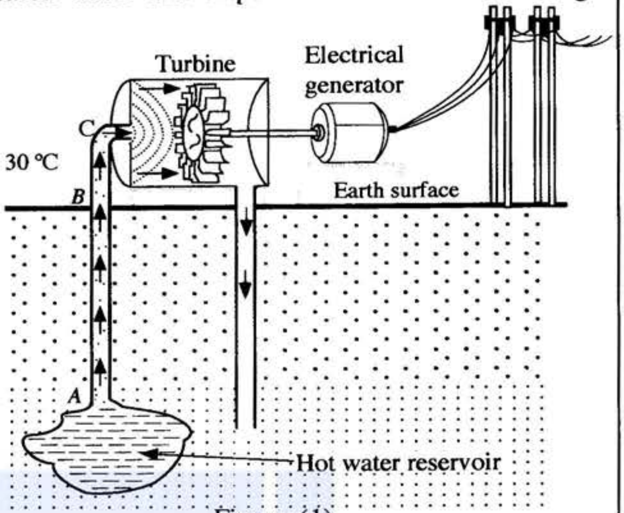

Figure (1)

(i) Write down an expression for heat released ΔQ by an object of specific heat capacity c and mass m when the temperature is decreased by $\Delta\theta$.

(ii) Calculate the amount of heat released by superheated water when superheated water at 200 °C in the reservoir is reduced to the boiling point (100 °C) of water. Assume that after inserting the pipe to the reservoir, the temperature of the superheated water drops to 100 °C at atmospheric pressure.

(iii) Calculate the total mass of steam that can be produced using the energy released from superheated water calculated in (*a*)(ii) above. The specific latent heat of vapourization of water is $2{\cdot}5 \times 10^6\ \text{J kg}^{-1}$.

(*b*) A cylindrical pipe made of a metal of thermal conductivity k_1 whose inner and outer radii are r_1 and r_2 respectively is covered with thick insulating material of thermal conductivity k_2. The outer radius of the composite pipe is r_3. The crossection of the pipe is shown in figure (2). At the steady state the inner and outer temperatures of the composite pipe are θ_1 and θ_2 ($\theta_1 > \theta_2$) respectively. Show that the rate of heat flow $\frac{Q}{t}$ passing radially outwards per unit length of the composite pipe is given by

$$\frac{Q}{t} = \frac{\theta_1 - \theta_2}{\dfrac{(r_2 - r_1)}{k_1\pi(r_2 + r_1)} + \dfrac{(r_3 - r_2)}{k_2\pi(r_3 + r_2)}}$$

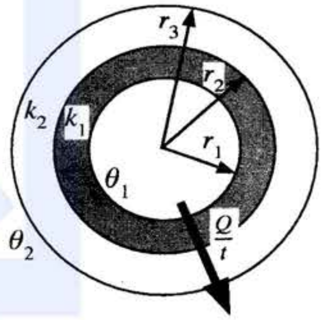

Figure (2)

(*c*) Geothermal power plants generate electricity by using geothermal energy. Steam at 100 °C obtained from the underground reservoir (*a*) above is fed to the turbine through a cylindrical metal pipe of inner and outer radii of 48 cm and 52 cm respectively. The pipe is covered with 6 cm thick insulation material. Thermal conductivities of the metal and insulation material are $100\ \text{W m}^{-1}\ \text{K}^{-1}$ and $\frac{2}{11}\ \text{W m}^{-1}\ \text{K}^{-1}$ respectively.

(i) If the average air temperature of the environment is 30 °C, calculate the rate of heat loss at steady state from the steam at 100 °C to the environment per unit length of the pipe between B and C. Take $\pi = 3$. In the calculation neglect the term containing 10^{-4} compared to the 10^{-1} term.

(ii) If the length of the pipe from the surface of the Earth to the turbine (between B and C) is 500 m, calculate the rate of heat loss from the steam to the environment from B to C.

(iii) Assume that rate of heat loss per unit length inside the Earth (from A to B) is half of that from B to C. The length of AB is 2 km. Calculate the total rate of heat loss from the whole pipe. (A to C).

(iv) Using steam the turbine produces 8·58 MW mechanical power(output power). If the mechanical efficiency of the turbine is 40%, calculate the input power given by steam to the turbine.

(v) How many years this geothermal power plant will function from heat generated by the superheated water calculated in (*a*) (ii) above. (Take 1 year = 3×10^7 s)

[see page sixteen

උසස් පෙළ විද්‍යා/ගණිත/කලා/වාණිජ හා තාක්ෂණ විෂය ධාරාවන්ට අදාල සියලුම ප්‍රශ්න පත්‍ර/සටහන් හා තවත් බොහෝ දෑ ලබා ගැනීමට පිවිසෙන්න www.alevelapi.com වෙත .

Part (B)

A monochromator is an optical instrument that can be used to produce a monochromatic beam of photons. In a photoelectric experiment a monochromatic beam of photons produced by the monochromator passes through a rectangular aperture and perpendicularly incident on a metal plate kept in a vacuum chamber as shown in the figure (1).

Initially the monochromator produces a beam of photons of wavelength 100 nm.

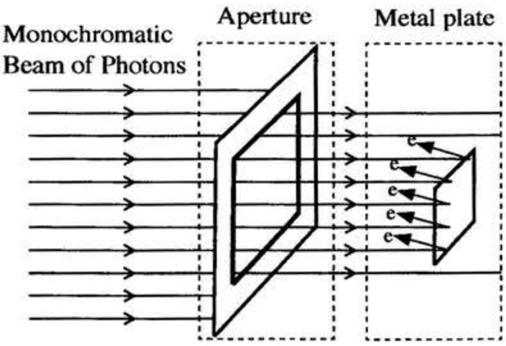

Figure (1)

Take $hc = 1240$ eV nm for all relevant calculations. Here h is Planck constant and c is speed of light.

(*a*) (i) Name the wavelength region of electromagnetic spectrum where the 100 nm of radiation belongs to.

(ii) Calculate the corresponding energy of the 100 nm photon in eV.

(iii) Considering the wave-particle duality, calculate the momentum of the photon with the above energy. ($h = 6{\cdot}6 \times 10^{-34}$ J s)

(*b*) (i) Derive an expression for intensity I (energy flowing through a unit area per unit time) of a monochromatic parallel beam of n number of photons each having energy E and passing through an area A during a time t.

(ii) If the intensity of 100 nm monochromatic beam of photons shown in figure (1) above is $9{\cdot}92 \times 10^{-8}$ W m^{-2} and the area of the rectangular aperture is 3 mm × 4 mm, how many photons passes through the aperture per unit time? (1 eV = $1{\cdot}6 \times 10^{-19}$ J)

(iii) If the metal plate shown is a silver plate of area 2 mm × 2 mm, calculate the number of emitted photoelectrons in a unit time from the plate, assuming each incident photon emits one photoelectron.

(*c*) (i) The work function of the silver plate used in this experiment is 4·0 eV. Find the minimum and maximum values of kinetic energy of the emitted photoelectrons in eV.

(ii) The monochromator is adjusted to produce monochromatic beams of photons of wavelengths from 100 nm to 500 nm in 50 nm increments and for each wavelength, maximum kinetic energy (K_{max}) of photoelectrons emitted from the silver plate is measured. The variation of K_{max} with the wavelength of photon beam is shown in the figure (2). What are the values corresponding to points A and B?

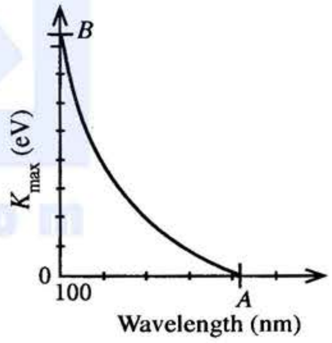

Figure (2)

(iii) The same experiment is repeated for a gold plate with a work function of 5·0 eV. Copy the graph in figure (2) in your answer sheet and draw clearly the corresponding curve for the gold plate in the same graph.

(iv) Same photon beam of wavelength of 200 nm is incident on both plates separately. The corresponding photocurrents measured from the silver and gold plates are i_s and i_g respectively. State whether $i_g = i_s$ or $i_g > i_s$ or $i_g < i_s$. Give reason for your answer. Assume each photon incident on the plates ejects one photoelectron.

(*d*) It has been reported that radiation of 222 nm can be used for inactivation of Covid-19 viruses. However, there is a maximum limit of 24 mJ cm^{-2} per 8 hour exposure time for a human body when 222 nm radiation is used in medical applications. What should be the maximum power of a point source which emits 222 nm radiation placed 20 cm from a person's Covid-19 virus contained palm? (Take $\pi = 3$)

* * *

උසස් පෙළ විද්‍යා/ගණිත/කලා/වාණිජ හා තාක්ෂණ විෂය ධාරාවන්ට අදාළ සියලුම ප්‍රශ්න පත්‍ර/සටහන් හා තවත් බොහෝ දෑ ලබා ගැනීමට පිවිසෙන්න www.alevelapi.com වෙත .