www.AlevelApi.com

AL/2019/01-E-II(NEW)

සියලු ම හිමිකම් ඇවිරිණි / முழுப் பதிப்புரிமையுடையது / All Rights Reserved

නව නිර්දේශය / புதிய பாடத்திட்டம் / New Syllabus

NEW

Department of Examinations, Sri Lanka

අධ්‍යයන පොදු සහතික පත්‍ර (උසස් පෙළ) විභාගය, 2019 අගෝස්තු
கல்விப் பொதுத் தராதரப் பத்திர (உயர் தர)ப் பரீட்சை, 2019 ஓகஸ்ற்
General Certificate of Education (Adv. Level) Examination, August 2019

භෞතික විද්‍යාව II
பௌதிகவியல் II
Physics II

01 E II

13.08.2019 / 0830 – 1140

පැය තුනයි
மூன்று மணித்தியாலம்
Three hours

අමතර කියවීම් කාලය - මිනිත්තු 10 යි
மேலதிக வாசிப்பு நேரம் - 10 நிமிடங்கள்
Additional Reading Time - 10 minutes

Use additional reading time to go through the question paper, select the questions and decide on the questions that you give priority in answering.

Index No. : ....

Important:

* *This question paper consists of 16 pages.*
* *This question paper comprises of two parts, Part A and Part B. The time allotted for both parts is three hours.*
* *Use of calculators is not allowed.*

PART A — Structured Essay:
(pages 2 - 8)

Answer all the questions on this paper itself. Write your answers in the space provided for each question. Note that the space provided is sufficient for your answers and that extensive answers are not expected.

PART B — Essay:
(pages 9 - 16)

This part contains six questions, of which, four are to be answered. Use the papers supplied for this purpose.

* *At the end of the time allotted for this paper, tie the two parts together so that Part A is on top of Part B before handing them over to the Supervisor.*
* *You are permitted to remove only Part B of the question paper from the Examination Hall.*

For Examiners' Use Only

For the second paper

Part	Question Nos.	Marks Awarded
A	1	
	2	
	3	
	4	
B	5	
	6	
	7	
	8	
	9 (A)	
	9 (B)	
	10 (A)	
	10 (B)	
Total	In numbers	
	In words	

Code Numbers

Marking Examiner 1	
Marking Examiner 2	
Marks checked by	
Supervised by	

[see page two

www.alevelapi.com
උසස් පෙළ විද්‍යා/ගණිත/කලා/වාණිජ හා තාක්ෂණ විෂය ධාරාවන්ට අදාළ සියලුම ප්‍රශ්න පත්‍ර/සටහන් හා තවත් බොහෝ දෑ ලබා ගැනීමට පිවිසෙන්න www.alevelapi.com වෙත .

Do not write in this column

PART A — Structured Essay

Answer all four questions on this paper itself.

(Consider acceleration due to gravity, $g = 10\,\mathrm{m\,s^{-2}}$)

1. An experimental setup used in a school laboratory to determine the surface tension of a liquid is shown in figure (1).

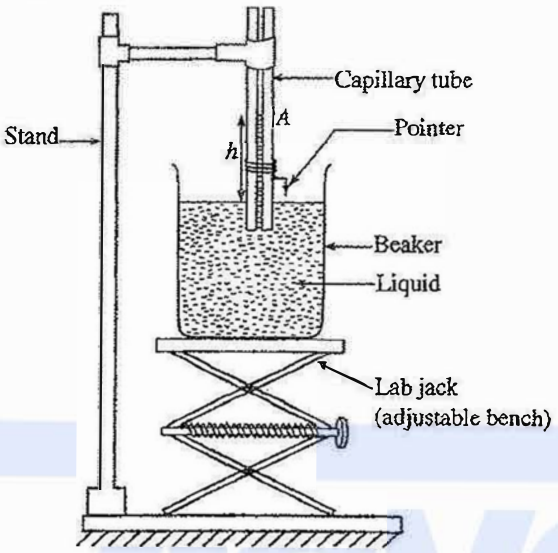

Figure (1)

(*a*) (i) Figure (2) shows the enlarged view of the vertical cross section of the capillary tube along the axis. Draw the meniscus of the liquid inside the capillary tube and indicate the surface tension T, and the contact angle θ between the liquid and the glass surface of the capillary tube in this figure.

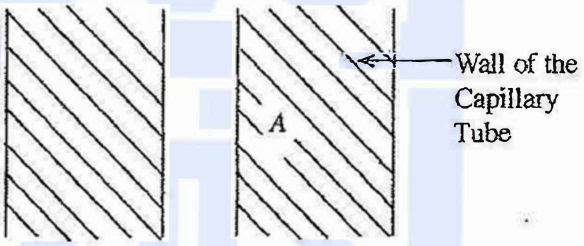

Figure (2)

(ii) If the height of the liquid column in the capillary tube, the inner radius of the capillary tube, and the density of the liquid are h, r, and ρ, respectively, obtain an expression for $h\rho g$ in terms of T, r, and θ.

....

....

(iii) Clearly writing the assumption made, show that the equation obtained in (ii) above can be reduced to $h = \dfrac{2T}{r\rho g}$.

....

....

....

(iv) In order to satisfy the assumption mentioned in (iii) above for a given liquid, write down the experimental procedure that should be followed in **the correct order**.

....

....

....

[see page three

A level අපි උසස් පෙළ විද්‍යා/ගණිත/කලා/වාණිජ හා තාක්ෂණ විෂය ධාරාවන්ට අදාල සියලුම ප්‍රශ්න පත්‍ර/සටහන් හා තවත් බොහෝ දෑ ලබා ගැනීමට පිවිසෙන්න www.alevelapi.com වෙත .

Do not write in this column

(v) Before taking the readings required to determine the height h, what is the adjustment to be made in the experimental setup shown in figure (1)?

....

....

(*b*) The following graph shows the experimental data (in SI units) obtained using 6 capillary tubes with different radii to determine the surface tension of water.

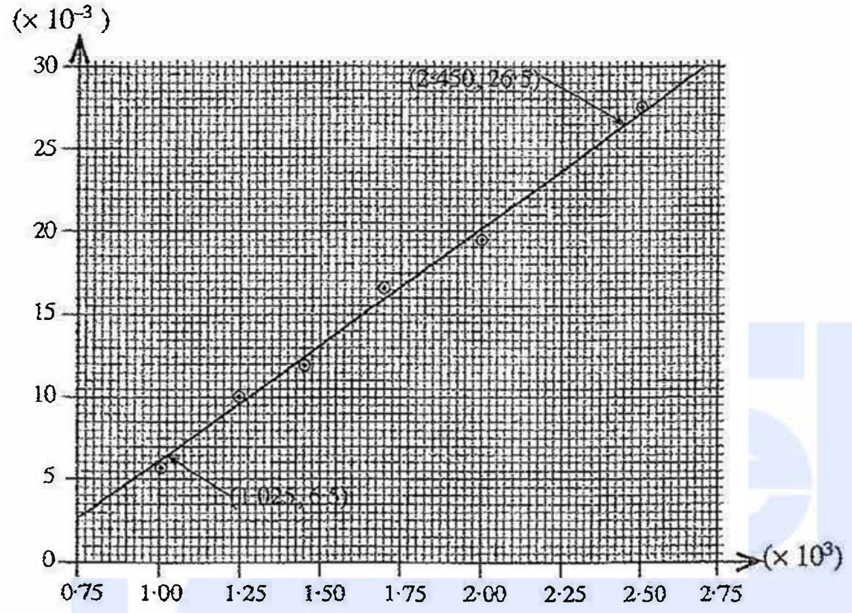

(i) Considering the equation in (*a*)(iii) above, identify and write down the independent variable (x) and the dependent variable (y) of the graph.

x: ....

y: ....

(ii) Determine the surface tension of water using the graph and state the answer with SI units. (Density of water is 1000 kg m^{-3}.)

....

....

....

....

(iii) What would happen to the capillary rise if soap water is used instead of water? Briefly explain the answer.

....

....

....

[see page four

www.alevelapi.com
උසස් පෙළ විද්‍යා/ගණිත/කලා/වාණිජ හා තාක්ෂණ විෂය ධාරාවන්ට අදාළ සියලුම ප්‍රශ්න පත්‍ර/සටහන් හා තවත් බොහෝ දෑ ලබා ගැනීමට පිවිසෙන්න www.alevelapi.com වෙත .

Do not write in this column

2. An incomplete diagram of an experimental setup to determine the thermal conductivity of a metal by the Searle's method is shown below.

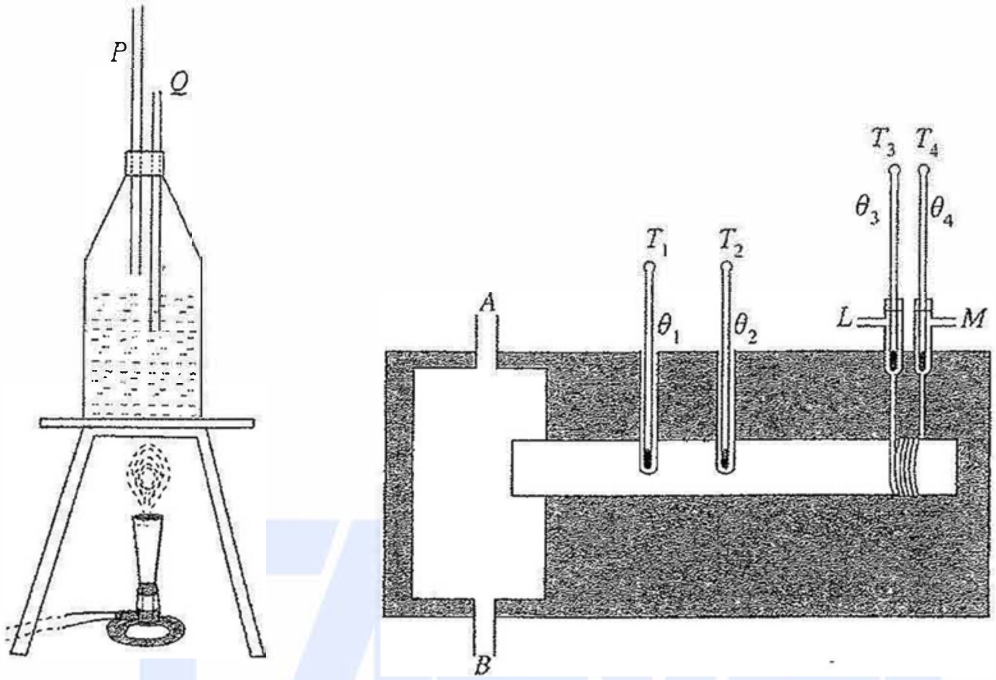

(*a*) What are the purposes of inserting tubes *P* and *Q* into the steam generator?

P: ....

Q: ....

(*b*) Proper connections of steam and water supply to Searle's apparatus are necessary to obtain the accurate result. Accordingly, select each connection and give reasons.

(i) Steam supply (*A* or *B*) : ....

Reason: ....

....

(ii) Water supply (*L* or *M*) : ....

Reason: ....

....

www.alevelapi.com

(*c*) State **three** more measuring instruments needed in this experiment and briefly state the specific measurement taken by each of them.

Instrument	Measurement
(i)	....
(ii)	....
(iii)	....

(*d*) The separation between the thermometers T_1 and T_2 is 8·0 cm. If the constant temperature readings of T_1 and T_2 are 73·8 °C and 59·2 °C, respectively, calculate the temperature gradient.

....

[see page five

උසස් පෙළ විද්‍යා/ගණිත/කලා/වාණිජ හා තාක්ෂණ විෂය ධාරාවන්ට අදාල සියලුම ප්‍රශ්න පත්‍ර/සටහන් හා තවත් බොහෝ දෑ ලබා ගැනීමට පිවිසෙන්න www.alevelapi.com වෙත .

Do not write in this column

(*e*) Does this temperature gradient vary along the rod? Briefly explain the answer.

(*f*) At thermal steady state, the difference in thermometer readings of T_3 and T_4 is 9·5 °C and the flow rate of water is 120 g per minute. Calculate the rate of heat absorption by water. (Specific heat capacity of water is 4200 J kg^{-1} K^{-1}.)

(*g*) If the cross-sectional area of the rod is 12·0 cm^2, calculate the thermal conductivity of the metal and state the answer with SI unit.

(*h*) Is it possible to use the Searle's method to find thermal conductivity of a poor conductor? Briefly explain the answer.

3. A standard spectrometer, a glass prism, and a monochromatic light source are used to determine the refractive index of the glass.

(*a*) A few necessary adjustments are to be done to the spectrometer before starting to take measurements.

(i) What is the adjustment that should be done to the eyepiece?

(ii) Telescope is pointed to a distant object and it is adjusted until a clear image of the object is formed on the cross wires. What is the purpose of this adjustment?

(iii) What is the adjustment that should be done to the slit of the collimator?

(iv) The telescope is brought in line with the collimator. Then the collimator is adjusted until a sharp image of the slit is formed on the cross wires. What is the purpose of this adjustment?

[see page six

www.alevelapi.com

උසස් පෙළ විද්‍යා/ගණිත/කලා/වාණිජ හා තාක්ෂණ විෂය ධාරාවන්ට අදාල සියලුම ප්‍රශ්න පත්‍ර/සටහන් හා තවත් බොහෝ දෑ ලබා ගැනීමට පිවිසෙන්න www.alevelapi.com වෙත .

Do not write in this column

(*b*) In order to level the prism table, the prism is placed as shown in figure (1) and the screws P, Q, and R are adjusted.

(i) When the telescope is at position T_1, the screw Q is adjusted to obtain a symmetric image of the slit on the cross wires. When the telescope is moved to the position T_2, which screw should be adjusted to get a symmetric image of the slit?

....

(ii) A student stated that the levelling of the prism table could easily be done using a spirit level. Is this statement correct? Briefly explain the answer.

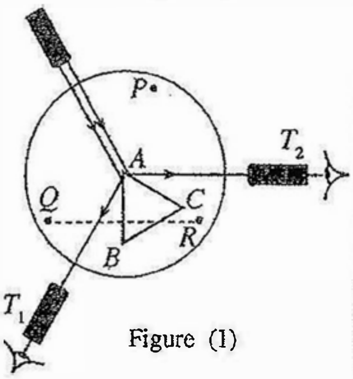

Figure (1)

....

....

(*c*) When the telescope is at positions T_1 and T_2, the readings of the spectrometer are 279° 58′ and 38° 02′, respectively. Note that the telescope passes the zero of the main scale when it is moved from T_1 to T_2. Calculate the prism angle A.

....

....

(*d*) To determine the angle of deviation of a light ray by the given glass prism, a student measured the incident and emergent angles i_1 and i_2, respectively, as shown in figure (2). The graph shows the variation of i_2 with i_1.

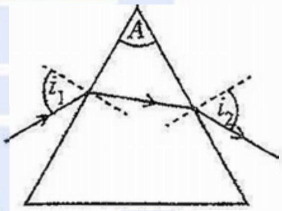

Figure (2)

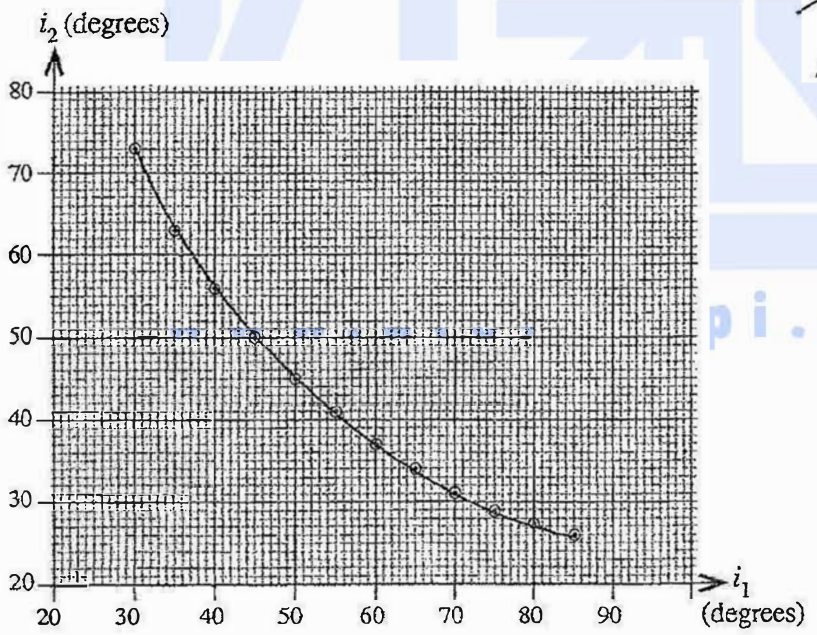

(i) Write down an expression for the angle of deviation d, in terms of the prism angle A, and the angles i_1 and i_2.

....

(ii) Determine the minimum angle of deviation D by using the graph.

....

....

[see page seven

උසස් පෙළ විද්‍යා/ගණිත/කලා/වාණිජ හා තාක්ෂණ විෂය ධාරාවන්ට අදාළ සියලුම ප්‍රශ්න පත්‍ර/සටහන් හා තවත් බොහෝ දෑ ලබා ගැනීමට පිවිසෙන්න www.alevelapi.com වෙත .

Do not write in this column

(iii) Calculate the refractive index of the glass that the prism is made of.

....

....

4. Figure (1) shows an experimental setup of a potentiometer with a 4 m long wire, that can be used to determine the internal resistance r of a given cell with electromotive force (emf) E ($< E_0$).

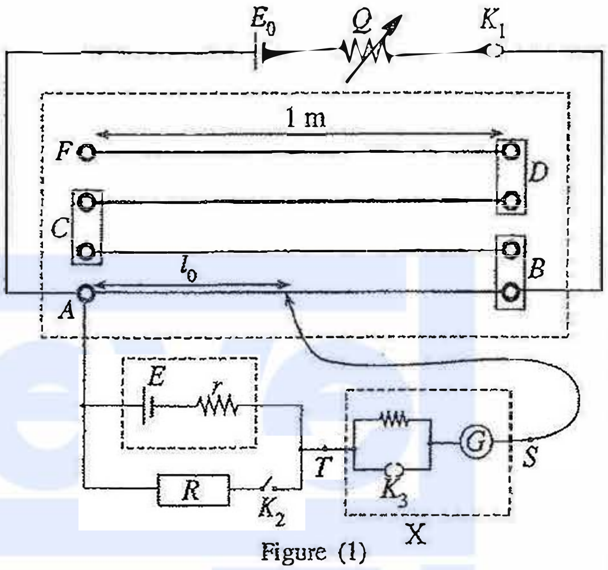

Figure (1)

(*a*) State **two** possible qualities of a potentiometer wire that affect the accuracy of measurements.

....

....

(*b*) Can the potentiometer shown in figure (1) be used as a voltmeter having an adjustable range? Give reasons for the answer.

....

....

www.alevelapi.com

(*c*) A student observed a small deflection of the galvanometer even when there is no current passing through it. Is it advisable to use this galvanometer for this experiment? Give reasons for the answer.

....

....

(*d*) When the switch K_2 is open, the balance length of the potentiometer wire is l_0. When K_2 is closed, the balance length is l. Obtain an expression for the internal resistance r of the given cell in terms of l, l_0, and R.

....

....

....

....

[see page eight

උසස් පෙළ විද්‍යා/ගණිත/කලා/වාණිජ හා තාක්ෂණ විෂය ධාරාවන්ට අදාල සියලුම ප්‍රශ්න පත්‍ර/සටහන් හා තවත් බොහෝ දෑ ලබා ගැනීමට පිවිසෙන්න www.alevelapi.com වෙත .

Do not write in this column

(*e*) With the given potentiometer, the balance length can be measured with a maximum error of 1 mm. If $R = 8\,\Omega$, $l_0 = 72{\cdot}4$ cm and $l = 50{\cdot}1$ cm, calculate the maximum value that could be obtained for the internal resistance r.

....

....

(*f*) Internal resistance r can be determined more accurately by a graphical method. Considering R as a variable resistor, rearrange the equation obtained in (*d*) to plot a suitable graph. Write down the independent (x) and dependent (y) variables of the graph.

....

....

x : ....

y : ....

(*g*) The potentiometer circuit shown in figure (1) can be modified by replacing the part of the circuit marked X in figure (1), by the circuit shown in figure (2). For this, the terminals S' and T' of the circuit shown in figure (2) are connected respectively to points S and T of the potentiometer circuit shown in figure (1).

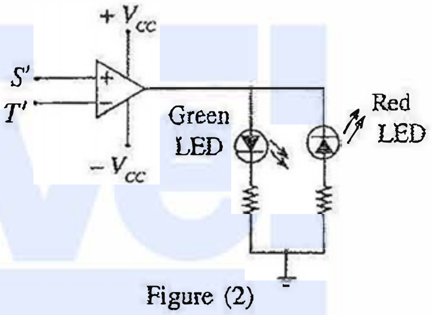

Figure (2)

(i) Assume that the balance point is located between A and B in the modified circuit. What is the colour of the Light Emitting Diode (LED) which is lit when the sliding key is placed at A and B?

At A : ....

At B : ....

(ii) Briefly explain how the balance point could be found using the modified circuit.

....

....

....

(iii) State **two** advantages of this modified circuit in finding the balance point, when compared with the circuit shown in figure (1).

....

....

* *

[see page nine

www.alevelapi.com

Aevel Api උසස් පෙළ විද්‍යා/ගණිත/කලා/වාණිජ හා තාක්ෂණ විෂය ධාරාවන්ට අදාල සියලුම ප්‍රශ්න පත්‍ර/සටහන් හා තවත් බොහෝ දෑ ලබා ගැනීමට පිවිසෙන්න www.alevelapi.com වෙත .

සියලු ම හිමිකම් ඇවිරිණි / முழுப் பதிப்புரிமையுடையது / All Rights Reserved]

නව නිර්දේශය/புதிய பாடத்திட்டம்/New Syllabus

NEW

Department of Examinations, Sri Lanka

අධ්‍යයන පොදු සහතික පත්‍ර (උසස් පෙළ) විභාගය, 2019 අගෝස්තු
கல்விப் பொதுத் தராதரப் பத்திர (உயர் தர)ப் பரீட்சை, 2019 ஓகஸ்ற்
General Certificate of Education (Adv. Level) Examination, August 2019

භෞතික විද්‍යාව II
பௌதிகவியல் II
Physics II

PART B — Essay

01 | E | II

Answer four questions only.
(Consider the acceleration due to gravity $g = 10\,\text{m s}^{-2}$)

5. (*a*) In electric power generators, the frequency of the output voltage depends on the number of magnetic poles P and the number of revolutions per minute N of the generator. The frequency f in Hz is given by

$$f = \frac{P \times N}{120}$$

A portable generator consisting of two magnetic poles typically works at 3000 revolutions per minute (rpm).

Find the following:

(i) The frequency of the output voltage of the generator

(ii) The rotational speed of the generator in radians per second (rad s^{-1}) (Take $\pi = 3$)

(*b*) A student has designed a model of a hydro-power plant by replacing the engine of the portable generator mentioned in (*a*) above, with a turbine that can be rotated by a water flow. He observed that the frequency of the output voltage varies with the consumption of electricity even at a constant water flow. To control the frequency variation of the output, he designed a controlling device to adjust the water flow to the turbine. Schematic diagram of the controlling device connected to a throttle valve is shown in figure (1).

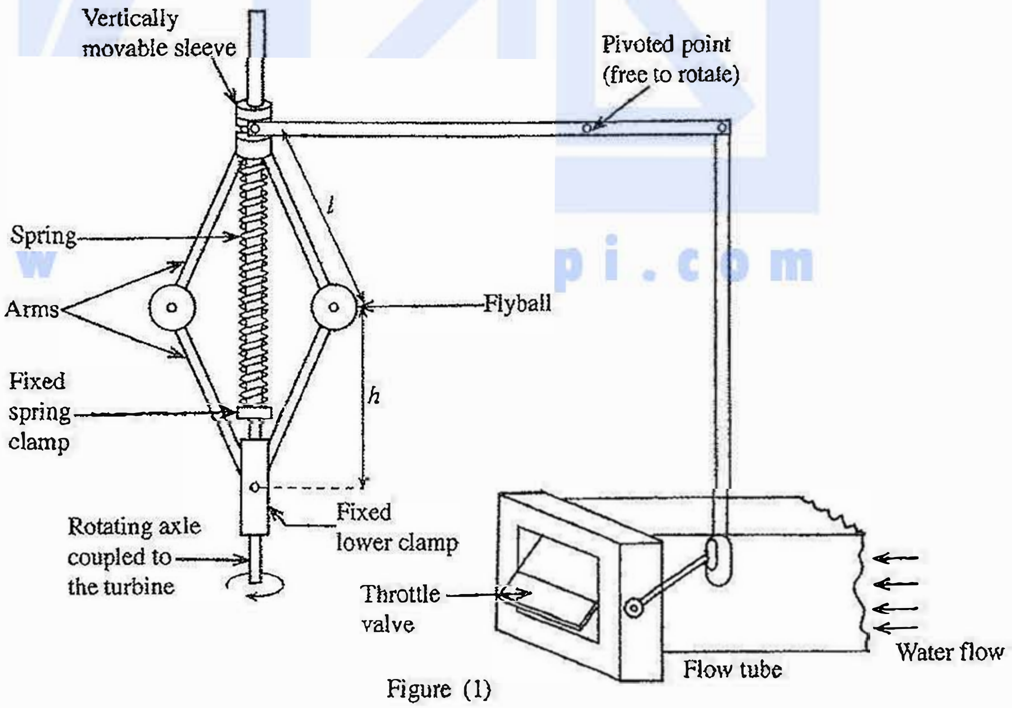

Figure (1)

Assume all the joints in this device are free to move without friction. During the rotation, flyballs move horizontally and it makes the sleeve move up and down along the rotating axle. This device is symmetric about the rotating axle. Opening and closing of the throttle valve is automatically controlled by the rotational speed of the turbine. All the other parts of the device can be assumed to be massless except the flyballs.

[see page ten

උසස් පෙළ විද්‍යා/ගණිත/කලා/වාණිජ හා තාක්ෂණ විෂය ධාරාවන්ට අදාළ සියලුම ප්‍රශ්න පත්‍ර/සටහන් හා තවත් බොහෝ දෑ ලබා ගැනීමට පිවිසෙන්න www.alevelapi.com වෙත .

(i) Draw the free body force diagram for a flyball assuming each arm connected to it, is under tension. Consider the mass of a flyball to be m.

(ii) If the angular velocity of each flyball about the rotational axle is ω rad s^{-1}, show that the tensions in the upper and lower arms are respectively given by $\frac{ml}{2}\left(\omega^2 + \frac{g}{h}\right)$ and $\frac{ml}{2}\left(\omega^2 - \frac{g}{h}\right)$.

Here l is the length of each arm and h is the height to each flyball from the lower clamp.

(iii) When the frequency of the output voltage is 50 Hz, the value of h is 30 cm. Show that the contribution to the tension from the term $\frac{g}{h}$ can be neglected.

(iv) If m = 1 kg and l = 50 cm, calculate the tension in an upper arm.

(v) When the frequency of the output voltage is 50 Hz, the contraction of the spring is 20 cm. Determine the spring constant of the spring.

(c) When the frequency of the output voltage is 50 Hz, the throttle valve is set to block 50% of the flow. That is, the valve is making an angle of 45° with the axis of the flow tube as shown in figure (2). Assume that the closing of the throttle valve is proportional to the angle of the valve with the axis of the tube.

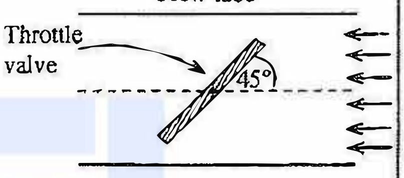

Figure (2)

The frequency of the output voltage depends on the consumption of electricity. When the consumption increases, the output frequency decreases and vice versa.

(i) According to the design, when the frequency of the output voltage becomes 25 Hz, the throttle valve will be fully opened. The valve will remain fully open even for frequencies lower than 25 Hz. Determine the following at the instant of fully opening the throttle valve. (Neglect the contribution from the term $\frac{g}{h}$)

(1) Tension of an upper arm

(2) Contraction of the spring

(ii) When the frequency of the output voltage increases, the throttle valve closes gradually to decrease the flow rate. If the flow is to be blocked by 75%, what should be the frequency of the output voltage?

6. (a) (i) Draw the standing wave patterns of the fundamental mode and the first two overtones produced by a vibrating stretched string, in **three** separate diagrams. Mark the nodes as 'N' and the antinodes as 'A' in the diagrams. (Neglect end corrections.)

(ii) Obtain an expression for the frequency f_n of the nth harmonic in terms of n, T, l, and m, where T is the tension, l is the length, and m is the mass per unit length of the string.

www.alevelapi.com

(iii) For a given string, state **two** possible ways of changing the harmonic frequencies.

(b) A harp like musical instrument shown in figure (1) consists of 7 identical stretched strings with different lengths. The longest string of length l_1, produces the musical note 'C' (ස, ஸ) with the fundamental frequency of 260 Hz. The corresponding lengths of the strings which produce all the musical notes are given in the table as fractions of l_1.

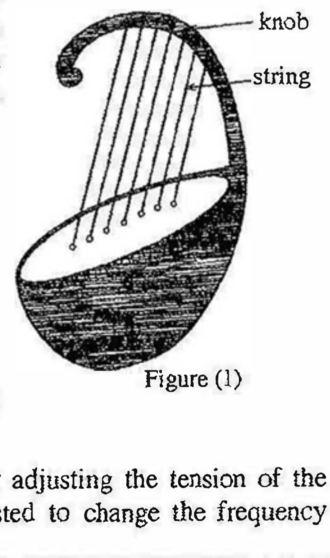

Figure (1)

Musical Notes	ස C ஸ	රි D ரி	ග E க	ම F ம	ප G ப	ධ A த	නි B நி
$\frac{l}{l_1}$	1·00	0·89	0·79	0·70	0·67	0·59	0·53

(i) If all the strings are under the same tension, calculate the fundamental frequencies of musical notes 'F'(ම, ம) and 'B' (නි, நி).

(ii) To obtain a correct musical note, the frequency can be fine tuned by adjusting the tension of the string. By what percentage should the tension of the string be adjusted to change the frequency by 1%?

[see page eleven

උසස් පෙළ විද්‍යා/ගණිත/කලා/වාණිජ හා තාක්ෂණ විෂය ධාරාවන්ට අදාල සියලුම ප්‍රශ්න පත්‍ර/සටහන් හා තවත් බොහෝ දෑ ලබා ගැනීමට පිවිසෙන්න www.alevelapi.com වෙත .

(*c*) A student designs and builds a set of panpipes to produce musical notes given in the above table, by using narrow PVC pipes with different lengths as shown in figure (2). Lower end of all the pipes are closed with corks.

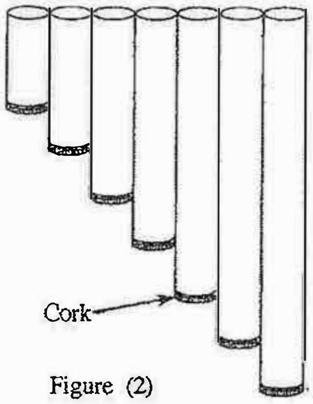

Figure (2)

(i) Draw the standing wave patterns of the fundamental mode and the first two overtones produced by a one end closed pipe of length L, in **three** separate diagrams. Mark the nodes as 'N' and the antinodes as 'A' in the diagram. (Neglect end corrections.)

(ii) Calculate the required lengths of the pipes in cm, which produce the musical notes 'C'(ස, ஸ) and 'B' (නි, நி). Assume that the velocity of sound in air at room temperature is 340 m s^{-1}.

(iii) The longest pipe is found to be producing a frequency of 255 Hz instead of 260 Hz. By what distance should the cork be moved to obtain the frequency of 260 Hz.

(iv) If the cork fell completely out of a pipe, what would happen to the fundamental frequency produced by the pipe? Justify the answer with a suitable diagram.

7. When an object is falling through a viscous medium, it is subjected to the buoyant force and the drag force. The buoyant force pushes the object upward while the drag force acts against the motion of the object with respect to the medium.

(*a*) The drag force for a solid spherical object falling in a liquid medium can be expressed by the Stokes' Law.

(i) Write down the Stokes' formula for a solid spherical object and name the parameters.

(ii) Write down **two** assumptions that are used in deriving the Stokes' formula.

(*b*) Consider an air bubble rising gradually upward in a viscous fluid. Stokes' Law can be applied to determine the time taken by an air bubble to reach the surface of the fluid. Neglecting the effect of the pressure change with height, the instantaneous velocity $V(t)$ of an air bubble in a viscous medium at a given time t can be given by $V(t) = V_T\left(1 - e^{-\frac{t}{\tau}}\right)$, where V_T and τ are the terminal velocity and the relaxation time of the motion of the air bubble, respectively.

(i) If the relaxation time for the motion of an air bubble in a viscous medium is 4 μs, calculate the time it takes for the instantaneous velocity to be 50% of V_T from the rest (Take $\ln 0{\cdot}5 = -0{\cdot}7$)

(ii) Calculate the time taken by the air bubble to increase the instantaneous velocity from 50% to 90% of V_T. (Take $\ln 0{\cdot}1 = -2{\cdot}3$)

(iii) Considering the answers obtained in (*b*)(i) and (*b*)(ii) above, plot the variation of the instantaneous velocity of the air bubble as a function of time. Clearly indicate V_T on the graph.

(*c*) Consider an air bubble rising from the bottom of an oil tank which is filled upto 10 m height.

(i) Obtain an expression for the resultant force acting on the air bubble in terms of η, ρ_o, ρ_a, a, and v, where η is the coefficient of viscosity of oil, ρ_o is the density of the oil, ρ_a is the density of air, a is the radius of the air bubble, and v is the velocity of the air bubble.

(ii) It is given that $\eta = 7{\cdot}5 \times 10^{-2}$ Pa s, $\rho_o = 900$ kg m^{-3}, $\rho_a = 1{\cdot}225$ kg m^{-3}, and the average radius of an air bubble $a = 0{\cdot}1$ mm. Neglecting the weight of the air bubble, and the effect due to the variation of pressure with height, calculate the terminal velocity of the air bubble.

(iii) Calculate the radius of the air bubble just below the surface of the oil, if the internal pressure of the bubble is 100·33 kPa, atmospheric pressure is 100 kPa, and the surface tension of oil is $2{\cdot}0 \times 10^{-2}$ N m^{-1}.

(iv) Considering the change in radius of the air bubble with height, sketch the variation of its instantaneous velocity with time.

[see page twelve

උසස් පෙළ විද්‍යා/ගණිත/කලා/වාණිජ හා තාක්ෂණ විෂය ධාරාවන්ට අදාළ සියලුම ප්‍රශ්න පත්‍ර/සටහන් හා තවත් බොහෝ දෑ ලබා ගැනීමට පිවිසෙන්න www.alevelapi.com වෙත .

8. (a) (i) A current I flows through a thin wire of very small length Δl. Show that the magnetic flux density ΔB at a point with a perpendicular distance d away from this wire, is given by $\dfrac{\mu_0 I \Delta l}{4\pi d^2}$.

(ii) A current I flows through a flat circular coil of radius R with N number of turns as shown in figure (1). Obtain an expression for the magnitude of the magnetic flux density B at the centre of the coil.

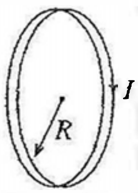

Figure (1)

(iii) Two such coils are placed coaxially with a separation R as shown in figure 2(a). The current I flows through both coils in the same direction. Figure 2(b) shows the vertical cross section of the coils through the common axis.

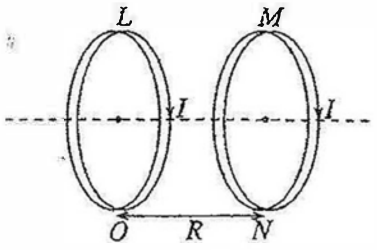

Figure 2(a)

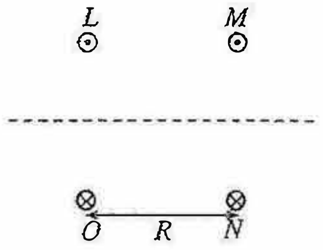

Figure 2(b)

Copy the figure 2(b) onto the answer script and draw the magnetic field lines to illustrate the magnetic field due to both coils.

(b) The apparatus shown in figure (3) can be used to determine the charge to mass ratio $\left(\dfrac{e}{m_e}\right)$ of an electron. The vacuum tube has a filament cathode C, electrodes A_1 and A_2, and a vertical fluorescent screen S with grid lines. The path of the electron beam can be seen on the fluorescent screen.

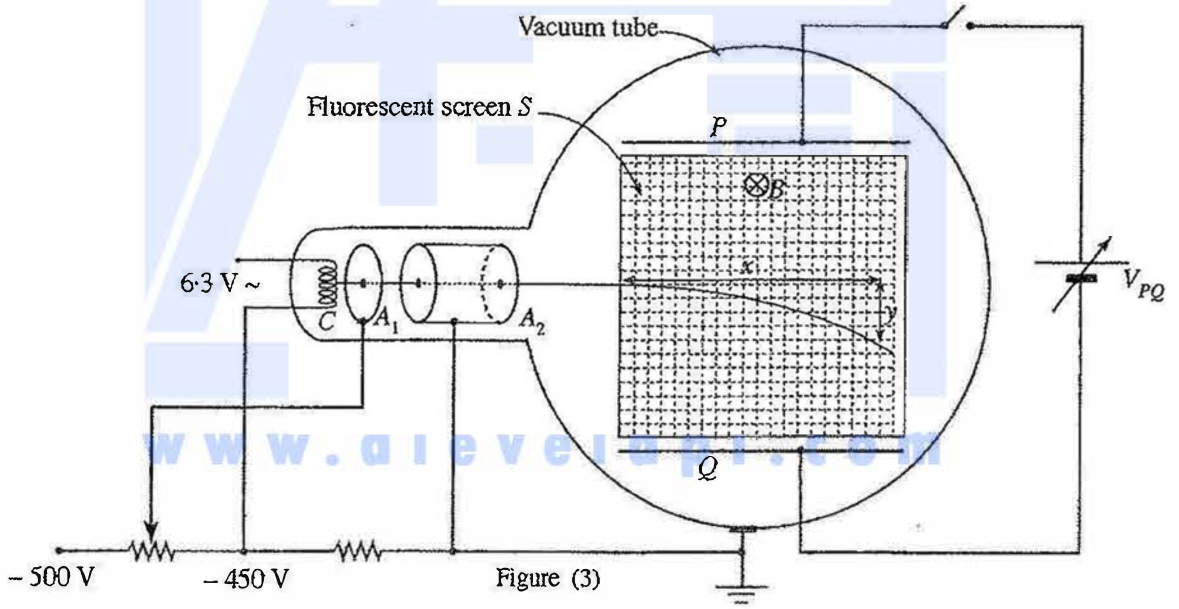

Figure (3)

(i) The function of the electrode A_1 is to control the intensity of the electron beam. What is the function of the electrode A_2?

(ii) If a negative voltage $(-V)$ is applied to electrode A_1, obtain an expression for the speed of an electron travelling through the electrode A_2. (Charge of an electron is $-e$ and mass of an electron is m_e.)

(iii) The spherical part of the tube is placed between two flat circular coils carrying the same current as shown in figure (4). Thereby a uniform magnetic field B is applied perpendicularly to the screen S. This makes the electrons move in a circular path.

If the radius of the path of the electron beam is r, obtain an expression for the ratio $\left(\dfrac{e}{m_e}\right)$ of the electron.

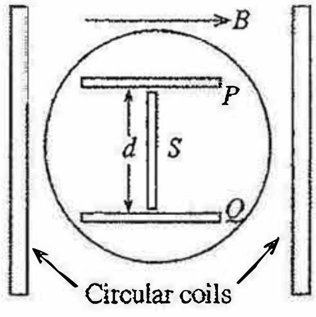

Figure (4)

[see page thirteen

www.alevelapi.com
උසස් පෙළ විද්‍යා/ගණිත/කලා/වාණිජ හා තාක්ෂණ විෂය ධාරාවන්ට අදාල සියලුම ප්‍රශ්න පත්‍ර/සටහන් හා තවත් බොහෝ දෑ ලබා ගැනීමට පිවිසෙන්න www.alevelapi.com වෙත .

(*c*) A dc voltage can be applied between two parallel metal plates P and Q as shown in figure (3). The plates P and Q are separated by a distance d as shown in figure (4). While the magnetic field B is applied, the potential difference between the plates V_{PQ} can be adjusted until there is no deflection of the electron beam. This process can be utilized as an alternative way to determine the speed of the electrons.

(i) Draw the electric and magnetic forces acting on an electron within the plates P and Q, after the above adjustment is done.

(ii) Obtain an expression for the speed of the electrons in terms of d, B and V_{PQ}.

(iii) When B = 1 mT and V_{PQ} = 0, the radius of the path of the electrons is 6 cm. When V_{PQ} = 840 V, there is no deflection of the electron beam. The separation between the plates P and Q is 8 cm.
Calculate
(1) the speed of an electron, and
(2) the charge to mass ratio $\left(\frac{e}{m_e}\right)$ of an electron.

9. Answer either part (A) or part (B) only.

Part (A)

(*a*) The electromotive force (emf) of an electric source is defined as the work done by the source on a unit charge. Using this definition;

(i) determine the units of emf.

(ii) obtain an expression for the power generated by a source in terms of its emf E and the current I flowing through it.

(*b*) A source of emf E and internal resistance r is connected to an external resistor with resistance R. Obtain an expression for the total energy dissipated in the circuit in time t, in terms of E, r, R, and t.

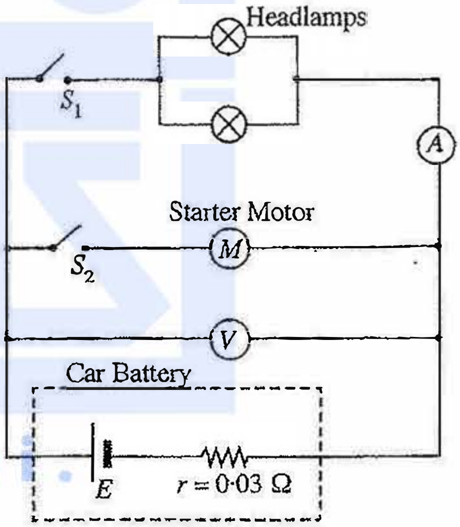

Figure (1)

(*c*) Consider an electrochemical battery of a car that powers the starter motor and the headlamps as shown in the circuit of figure (1). Rated power of each headlamp is 60 W. The internal resistance of the battery is 0·03 Ω. Consider that the ammeter behaves as an ideal ammeter.

When only the headlamps are turned on (S_1 is closed) without starting the car (S_2 is open), the voltmeter shows a value of 12·0 V.

(i) What is the reading of the ammeter?

(ii) What is the resistance of a headlamp?

(iii) Calculate the emf of the battery.

(*d*) When the starter motor is just turned on (S_2 is just closed) while the headlamps are ON, the ammeter shows a value of 8·0 A. Calculate,

(i) the current through the starter motor, and

(ii) the resistance of the starter motor.

(*e*) When the armature of the starter motor is rotating while the headlamps are ON, the current through the starter motor is 34·2 A and the voltmeter reading is 11·0 V.

Calculate,

(i) the back emf, and

(ii) the efficiency of the starter motor, at this instant.

(*f*) Sketch the variation of the back emf E_b of the motor with the current flowing through it.

[see page fourteen

උසස් පෙළ විද්‍යා/ගණිත/කලා/වාණිජ හා තාක්ෂණ විෂය ධාරාවන්ට අදාල සියලුම ප්‍රශ්න පත්‍ර/සටහන් හා තවත් බොහෝ දෑ ලබා ගැනීමට පිවිසෙන්න www.alevelapi.com වෙත .

(*g*) The battery discharged considerably because the driver parked the car without turning off the headlamps on a certain night. As a result, emf of the battery dropped to 10·8 V and its internal resistance increased to 0·24 Ω. The current through the starter motor was not sufficient to rotate it due to the discharge of the battery. Find the current through the starter motor at this instance.

(*h*) In the situation mentioned in (*g*) above, the driver used an external battery with an emf 12·3 V and an internal resistance 0·02 Ω to jump start the car. For this, the external battery was connected to the discharged battery using two jumper cables, each having a resistance of 0·015 Ω and the car was then started.

(i) Draw the circuit diagram showing the connections to the external battery with the discharged battery, when jump starting the car.

(ii) Calculate the **maximum** current through the starter motor when starting the engine.

Part (B)

(*a*) (i) Why Field Effect Transistors (FET) are called unipolar devices? What are the charge carriers contributing to the operation of FETs?

(ii) State why FETs are also known as voltage-controlled devices.

(iii) Calculate the drain current I_D and the Gate-Source voltage V_{GS} for the circuit shown in figure (1), assuming $V_D = 5$ V.

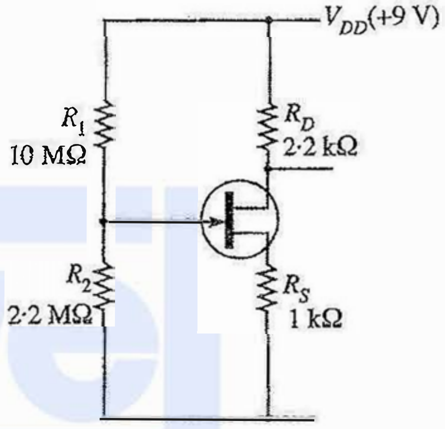

Figure (1)

(*b*) In the Op-amp circuit shown in figure (2), each electromechanical switch S_i (i = 0, 1, 2, 3) is operated by applying an electrical signal D_i (i = 0, 1, 2, 3) which can be 'High' (5 V) or 'Low' (0 V). When D_i is 'High' the respective switch S_i will be closed and otherwise, it will be open.

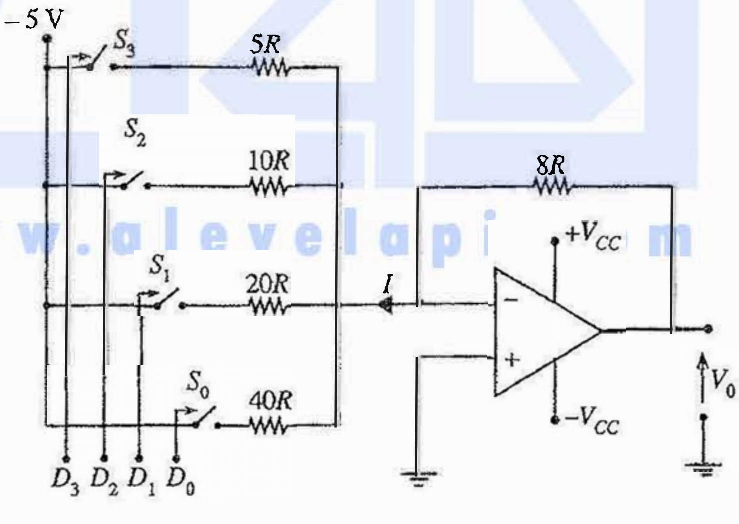

Figure (2)

(i) When D_2 is 'High', find the current through the resistor 10R in terms of R.

(ii) If a set of voltages (5 V, 0 V, 5 V, 5 V) is applied simultaneously to operate the switches S_3, S_2, S_1, S_0, respectively, calculate the current I indicated in figure (2) in terms of R.

(iii) Calculate the output voltage V_0 when a set of voltages (5 V, 5 V, 5 V, 5 V) is applied simultaneously to operate the switches S_3, S_2, S_1, S_0, respectively.

[see page fifteen

උසස් පෙළ විද්‍යා/ගණිත/කලා/වාණිජ හා තාක්ෂණ විෂය ධාරාවන්ට අදාල සියලුම ප්‍රශ්න පත්‍ර/සටහන් හා තවත් බොහෝ දෑ ලබා ගැනීමට පිවිසෙන්න www.alevelapi.com වෙත.

(c) A cash operated snack dispenser will provide a pack of '*Marie*' or '*Chocolate Cream*' biscuits under the following conditions.

- The correct amount of cash is inserted (*I*)
- '*Marie*' (*M*) or '*Chocolate Cream*' (*C*) is selected
- If '*Marie*' is selected, 'Availability of *Marie*' in the dispenser (*X*)
- If '*Chocolate Cream*' is selected, 'Availability of *Chocolate Cream*' in the dispenser (*Y*)

(i) Obtain the logic expression for the conditions under which a pack of biscuits may be obtained.

(ii) Show how this may be implemented using logic gates.

10. Answer either part (A) or part (B) only.

Part (A)

(*a*) (i) State the Boyle's law and the Charles' law.

(ii) Derive the ideal gas equation using the above laws.

(*b*) A deflated tyre of volume V and initial pressure P_0, at room temperature T_R is connected to a compressed nitrogen (N_2) gas tank via a valve. The tyre initially contains only N_2 gas. After inflating the tyre with N_2 gas, its final pressure is P and it contains a total of n number of N_2 moles. Assume that there is no change in volume of the tyre.

(i) Assuming that the N_2 gas inside the tyre behaves like an ideal gas, show that the number of moles of N_2 gas pumped into the tyre is $n\left(1-\frac{P_0}{P}\right)$.

(ii) Obtain an expression for the work done to inflate the tyre with N_2 gas.

(iii) Assuming that the pumping process of N_2 gas is adiabatic, show that the change in the temperature of the N_2 gas inside the tyre is $\frac{2}{5}\left(1-\frac{P_0}{P}\right)T_R$. The change in internal energy of an ideal gas is given by $\Delta U = n\,C_V\,\Delta T$, where C_V is the molar heat capacity at constant volume and ΔT is the change in temperature. The molar heat capacity at constant volume of a diatomic ideal gas is $\frac{5R}{2}$, where R is the universal gas constant.

(iv) This change in temperature, increases the pressure temporarily to a higher value. Show that this change in pressure is $\frac{2}{5}(P-P_0)$.

(*c*) Gauge pressure is the pressure measured relative to atmospheric pressure. Gauge pressure of a tyre is usually expressed in psi (pound per square inch) units. (1 atm ≈ 100 kPa and 1 psi ≈ 7 kPa)

A deflated tyre at 20 psi pressure is pumped further with N_2 gas to a pressure of 30 psi at room temperature (27° C).

(i) Calculate the change in temperature of N_2 gas in the tyre.

(ii) Calculate the maximum pressure in the tyre due to this change in temperature.

(iii) Usually this temporary increase in pressure is not observable when pumping N_2 gas further to a deflated tyre. Give **two** possible reasons for not observing the increase in pressure.

Part (B)

Read the following passage and answer the questions.

Radioactivity is a spontaneous decay process by which an unstable nucleus becomes a stable nucleus by emitting radiation. Decay rate is directly proportional to the number of radioactive atoms present at that instant but independent of external physical conditions.

Radioactive iodine ^{131}I is used in nuclear medicine to treat patients with thyroid cancer. The half-life time of ^{131}I is 8 days. It decays to stable ^{131}Xe initially by emitting a β^- particle and then by emitting a γ-photon. The maximum tissue penetration length of this β^- is 2 mm. Usually ^{131}I is administered to patients as sodium iodide ($Na^{131}I$) in the form of a capsule. Once administered, it is absorbed into the blood stream and concentrated in the thyroid gland. Radiation emitted from ^{131}I kills most of the cancer cells in the thyroid gland.

[see page sixteen

www.alevelapi.com
උසස් පෙළ විද්‍යා/ගණිත/කලා/වාණිජ හා තාක්ෂණ විෂය ධාරාවන්ට අදාල සියලුම ප්‍රශ්න පත්‍ර/සටහන් හා තවත් බොහෝ දෑ ලබා ගැනීමට පිවිසෙන්න www.alevelapi.com වෙත .

Since the patient becomes a potential source of radiation, precautions must be taken to minimize the radiation exposure to others around. The amount of radiation emitted by the patient is proportional to the activity of the dose administered. In medical practice, the common unit used for activity is Curie (Ci) which is not an SI unit. One Curie is equal to 37×10^9 disintegrations per second.

A radioactive material inside the body, diminishes not only by radioactive decay but also by biological clearance. This clearance is purely a biological process and follows an exponential variation, characterized by the decay constant λ_b. Hence the effective decay constant λ_e, due to both radioactive decay and biological clearance can be stated as $\lambda_e = \lambda_p + \lambda_b$, where λ_p is the decay constant corresponding to physical radioactive decay. The effective half-life time, which is used for radiation protection measures, is calculated from the effective decay constant.

(*a*) (i) State **two** differences between the emissions of β^- and γ.

(ii) Rewrite the following decay equation replacing a, b, and c with correct numbers.

$${}^{131}_{53}\text{I} \longrightarrow {}^{131}_{a}\text{Xe} + {}^{b}_{c}\beta^-$$

(*b*) A fresh sample of Na^{131}I, having an activity of 100 mCi is received by a hospital. The sample is stored in a lead container at room temperature.

(i) What is the SI unit used for activity?

(ii) Write down an expression for the decay constant λ in terms of half-life time T.

(iii) Calculate the activity of the above sample after 4 days and express the answer in SI units. (Take $\ln 2 = 0{\cdot}7$ and $e^{-0{\cdot}35} = 0{\cdot}7$)

(iv) Hence, express the change in activity as a percentage.

(v) Is it possible to reduce the activity of the Na^{131}I sample if it is stored at 0 °C instead of storing at room temperature? Explain the answer.

(*c*) A small amount of Na^{131}I sample having an activity of 100 mCi is administered to a thyroid patient.

(i) When dealing with such a patient, for which mode of emission, the radiation protection measures should be taken? Explain the answer.

(ii) Show that the effective half-life time T_e of ^{131}I in thyroid gland can be given by $\frac{1}{T_e} = \frac{1}{T_p} + \frac{1}{T_b}$, where T_p and T_b are the half-life times due to radioactive decay and biological clearance, respectively.

(iii) If the biological half-life time of ^{131}I in thyroid gland is 24 days, calculate the effective half-life time of ^{131}I (in days).

(iv) Calculate the percentage change in the activity after 4 days of administration of ^{131}I. (Take $e^{-0{\cdot}46} = 0{\cdot}63$)

(v) According to radiation protection regulations, ^{131}I treated patients can be discharged from the hospital when the activity is below or equal to 50 mCi. If this regulation is followed, how long the above ^{131}I treated patient has to be kept in isolation in the hospital before discharging?

* * *

www.alevelapi.com

උසස් පෙළ විද්‍යා/ගණිත/කලා/වාණිජ හා තාක්ෂණ විෂය ධාරාවන්ට අදාල සියලුම ප්‍රශ්න පත්‍ර/සටහන් හා තවත් බොහෝ දෑ ලබා ගැනීමට පිවිසෙන්න www.alevelapi.com වෙත .